International Journal of u- and e- Service, Science and Technology
Vol.8, No. 8 (2015), pp.41-54
http://dx.doi.org/10.14257/ijunesst.2015.8.8.05

Design and Management Features of Ecological Sanitation

Tomas U. Ganiron Jr.

IAENG, Hongkong
College of Architecture, Qassim University, Buraidah City
Tomasuganironjr@gmail.com

Abstract

Much has been learned about ecological sanitation systems from the many units in the world today. In China and Vietnam, hundreds of thousands of rural households have double-varied toilets and many recycle their products in agriculture. This study focuses on a new improvement for the success of ecological sanitation project by using urine diverting dehydrating toilets including the design and management features of ecological sanitation toilet systems, so that mistakes can be avoided. Moreover, this will provide an overview of the variables that influence the choice of an appropriate sanitation system and the possibilities in dealing with liquids and in sanitizing solids.

Keywords: *Construction materials, ecosan, ecological sanitation, recycling waste, waste materials*

1. Introduction

Ecological sanitation is based on three fundamental principles: preventing pollution rather than attempting to control it after we pollute; sanitizing the urine and the faeces; and using the safe products for agricultural products for agricultural purposes. This approach can be characterized as "sanitize and recycle".

This approach is cycle –a sustainable, closed-loop system. It treats human excreta as a resource. Urine and faeces are stored and processed on site and then, it necessary, further processed off site unit they are free of disease organisms. The nutrients contained in the excreta are then recycled by using them in agriculture.

Environmentalist gave various perceptions as to the factors that affected sanitation of a certain locality because some claimed that saving the environment depends on the local people or those who reside in the municipality. Some of the people in the urban areas have their own way of disposing their human excreta. This should not be in the case throwing waste material in the river is a grave sin to the environment. Since proper sanitation has been overridden, many volunteers in the Philippines and NGO's find ways to help in the mobilization of projects that aim to educate the people in the slum areas to properly dispose their human waste. The most common problem in the provincial areas is the water supply and proper sewage systems, Sometimes the supply is not adequate enough in order to sustain the needs of the local community prompting the people in the local community to complain about the situation [1].

Filipino engineers especially those in the government sectors have been trying to find various ways on how to improve the sanitation practice of the Filipino people [2]. In coordination with the government health agencies, they conduct seminars on sanitation practice showing both the right and the wrong habits. The health officers who conduct this have been trained by the Department of health and thru an extensive study. They have been able to implement the right practice. But still there would be some resistance in the group. Various complain in the locality such as sewer system, water supply, and cost of the installation of sanitation facility. This factor has played a very vital role in making it hard for the government health officers to fully implement the right sanitation practice.

ISSN: 2005-4246 IJUNESST

The current approaches to sanitation are based on the notion that the human excreta is “waste” that is something to get rid of because it is smelly and potentially dangerous. With this approach, people we pollute the environment, since we fail to provide toilets to more than half the population of the world.

The challenge of an ecological sanitation is about design and management that lies on the extraction of relevant and useful information that may be taken from vast materials may then be printed of otherwise.

The study is primarily on the “design and management” concentrating on waterless toilet bowl on the Philippine setting. The researcher believes that such study is revolutionary since this venture is relatively raw in terms of application in the country, and the areas covered are limited tom its provincial municipalities.

1.1. Literature Review

1.1.1. History of Ecological Sanitation: EcoSan is an ancient idea that has gained new credence internationally. People throughout history have used faeces and urine for agricultural purposes as they have recognized the positive qualities of these so-called wastes. EcoSan builds on this knowledge, and promotes a range of technological sanitation alternatives that allow people to hygienically recycle human excreta back into the environment [1, 3].

The recovery and use of urine and feces in "dry sanitation systems", i.e. without sewers or without mixing substantial amounts of water with the excreta, has been practiced by almost all cultures. The reuse was not limited to agricultural production. The Romans, for example, were aware of the bleaching attribute of the ammonia within urine and used it to whiten clothing [3, 6]

In Lübeck-Flintenbreite an innovative decentralized sanitation concept has been realized in a densely populated peri-urban area for a planned capacity of 350 inhabitants. Graywater and blackwater is collected and treated separately [3, 5]. By using vacuum toilets with only 0.7 l water per flush, relatively undiluted blackwater is collected and co-treated with shredded organic waste by anaerobic digestion after a thermal sanitization. The produced biogas is used in a heat and power generator and the digested sludge goes to agriculture with further storage for the growth period. Graywater is drained by gravity and treated via a vertical constructed wetland [4]. Rainwater is collected by small gutters on the ground surface and infiltrated by a swale system. The economically feasible project was pre-financed by a bank and a private company operates the system with high integration of the inhabitants. Figure 1 shows the EcoSan concept of the project and one of the family houses and the main technical installations can be seen in Figure 2 [6].

There are many factors contributing to the selections of sanitation solution. In making the selection, it is important to map cultural, social and economic factors. Sanitation methods should be chosen to motivate users for usage and maintenance of the facility. To meet the needs of users, participation from then users’ side in sanitation planning is very important. Sanitation solutions dictated by outsiders are usually not long lasting and in the long run inappropriate solutions culturally will not be used by the local population.

A sanitation system that provides Ecological Sanitation (EcoSan) is a cycle—a sustainable, closed-loop system, which closes the gap between sanitation and agriculture. The EcoSan approach is resource-mined and represents a holistic concept towards ecologically and economically sound sanitation. The underlying aim is to close (local) nutrient and water cycles with a less expenditure on material and energy as possible to contribute to a sustainable development.

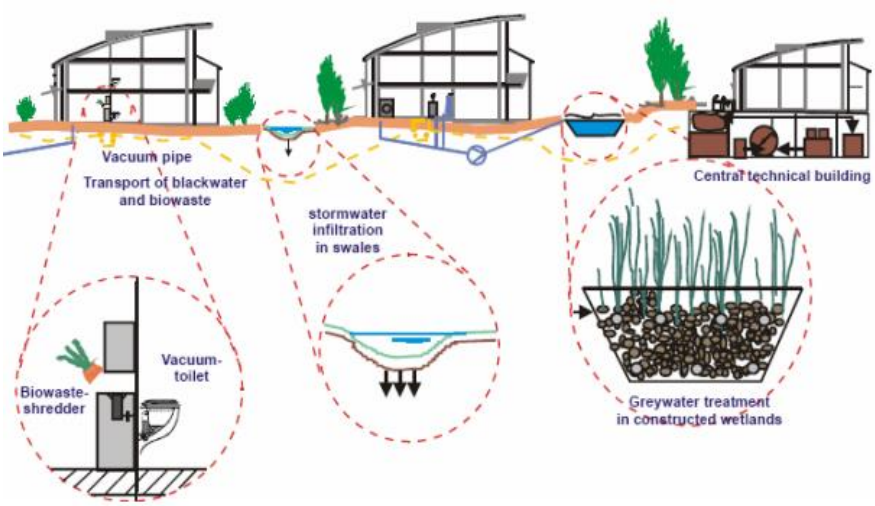

Figure 1. SCHEMATIC View of the EcoSan concept of the Flintenbreite, Germany

Figure 2. Pictures of One of the Family Houses, of the Vacuum Station, the Sanitization Tank and the Biogas Plant, Flintenbreite, Lübeck, Germany

1.1.2. Health Aspects: The most important criterion of ecological sanitation, as for all sanitation approaches, is that the system forms a barrier against the spread of disease caused by pathogens in human excreta [7]. This is also one of the basic aims of conventional "flush and discharge" or "drop and store" sanitation systems which have well known drawbacks in downstream or ground water contamination, eutrophication, and long term destruction of freshwater ecosystems, coastal areas and loss of plant nutrients.

In the nature of waste is not generated, but all the products of organisms are used as nutrients for other organisms. Plants give directly nutrition to herbivores or indirectly as energy for the animal higher in the food chain. When animals defecate into the nature, the unused nutrients transfer back to soil.

Pathogens and parasites found in human excreta are widely responsible for a variety of diseases in developing countries. The risk of transmission of infectious diseases via the abundance of pathogens can be reduced essentially by keeping the magnitude of the problem as small as possible by preventing mixing of the critical fraction of faeces with urine or water.

According to [1,8], the essential step within the EcoSan concept is sufficient hygiene and handling of the materials before their recovery and re-use.

1.1.3. Agricultural Aspect: The goal of the EcoSan WTB technology is to make the human excreta a usable material in such a way that people would benefit from

the new technology [9]. This is also to help the environment regain its former beauty.

The nutrients contained within faeces and urine are frequently better than the commercial fertilizers being applied at great cost to crops throughout the world. To many poor families and individuals, commercial fertilizers are, in any case, unaffordable. Even if commercial fertilizers were cheaper and easily accessible to the poor, other hard questions are being asked about the long term consequences of commercial fertilizer application such as the dangers of polluting rivers and reduction in the carrying the capacity of the land over time.

The agriculture within city limits, so-called urban agriculture, became a survival strategy for many poor families in the last decades--these families would not be able to secure their nutrition within urban agriculture. This form of agriculture can be a vehicle to increase food security and health, to generate economic opportunities for people with low income and to promote recycling of waste and waste water.

1.1.4. Sanitation Facility: The sanitation facility in the Philippines is now currently on the development stage waterless urinals on the local malls are now being installed. Similar to the EcoSan system, it is relatively waterless [3,7].

In the study of [2, 9], Sanitation project in Vietnam stated that after using about five months, roofs of 23 toilets and other parts of 11 toilets were damaged mainly by strong wind because project site was located in windy area. Inadequate modification of design to suit the local conditions such as strong wind led to the damages. In addition, it was found that the difference in the forms of construction affected the status of toilets and the inadequate construction of some toilets resulted in the damages. Based on the results, and the discussions on the EcoSan construction, influential characteristics and factors for proper EcoSan construction were proposed. On the other hand, some damaged toilets were repaired by people themselves.

With the invention of the water toilet and subterranean gravity sewers, the development of sanitation systems moved from decentralized to centralized wastewater management. The water toilet improved health, but severely polluted waterways. At the same time, the costs for sewage treatment started to exceed the range of affordability for most people in developing countries. IF the water toilet had been invented today, it would probably not have been certified as sanitation technology meeting sustainability criteria. In cities, water toilets account for 20-40% of water consumed [10].

Potable water, a limiting factor for development is misused to flush human waste where both water and the excreta should be considered as a resource. Theoretically, the nutrients in domestic wastewater are almost sufficient to fertilize all the crops needed to feed the world population.

As much as 80-90% of the major plant nutrients (nitrogen, phosphorous and poitassium0 in wastewater are present in the toilet waste. If these nutrients are reclaimed using hygienically safe pathways, they can be used locally as a fertilizer in suitable agriculture [11,13].

North Vietnamese, who commonly use dehydrating toilets, have 90% infestation rate with “Ascaris”, whereas South Vietnamese, who defecate over fish ponds, have only 50-90% rate, which suggests that the former process made not be killing “Ascaris ova”. Studies made on the Vietnamese toilets stated that the most significant factor for pathogen die-off was high, pH, caused by the addition of ash or lime, and time away from the host, rather than desiccation or pile temperature, which was not significantly higher than ambient [9, 10].

If composing temperatures of 50-60 ^{0}C can be reached, all pathogens worm eggs die in a few days, however, these temperatures are rarely achieved. In the SIRDO

toilet, only fertilizer from the solar toilets fulfilled the Engelberg guidelines [14, 15]. Prefabricated units worked best, with no pathogens at all after six months.

This is also one of the considerable factors. In areas where ground water is close to the surface of the ground traditional pit latrines cannot be used. Also, seasonal changes in the surface level of ground water should be taken into account. It is also necessary to pay attention to location of water sources in relation to latrines.

Influence especially on the amount of rains and runoffs as well as on treatment and utilization of latrine wastes. Condition and utilization of existing sanitation sites should be thoroughly surveyed before building new latrines in the area. Economic factors and especially the know-how on the local people have influence on the actual construction work.

1.1.5. Waste Management: The present trend in the country is waste recycling which is truly a benefit for the environment; thus, with the present situation of waste disposal, the EcoSan WTB unit has its own waste management procedure that would definitely help the environment [10, 11].

Wastewater has for a long time been regarded as a problem as it involves hygienic hazards, as well as containing organic matter and eutrophying substances in the form of nitrogen and phosphorous. These substances cause problems in seas, lakes and streams, but on the other side, they would be valuable for agriculture purpose.

The Integrated Sustainable Waste Management concept served as the framework for the development of the criteria for a good transport system [11, 16]. The relevant aspects were applied and adjusted to the specific characteristics of excreta removal and EcoSan and to the content of India, mostly through literature study and semi-structured interviews. This resulted in a set of criteria that was used to compare and assess different formulated collection and transport options. Possible options were identified by studying the current waste removal methods in New Delhi and by formulating main logistic systems. The situational conditions of the specific area in which the transport system had to be fitted were studied through a field study, which comprised observations and interviews with inhabitants, NGOs, responsible authorities, users and salespersons of relevant equipment. The concern and criteria of the community and farmers on storage, collection, transfer and toilets and water use were gathered through several semi-structutred group interviews with community members and nearby farmers. Appropriate options were further analyzed on financial implications

2. Design Features

This provide an overview of the variables that influence the choice of an appropriate sanitation system and possibilities in dealing with liquids and in sanitizing solids, and finally to discuss a number of design features. Figure 3 shows the factors influencing design and management of ecological sanitation.

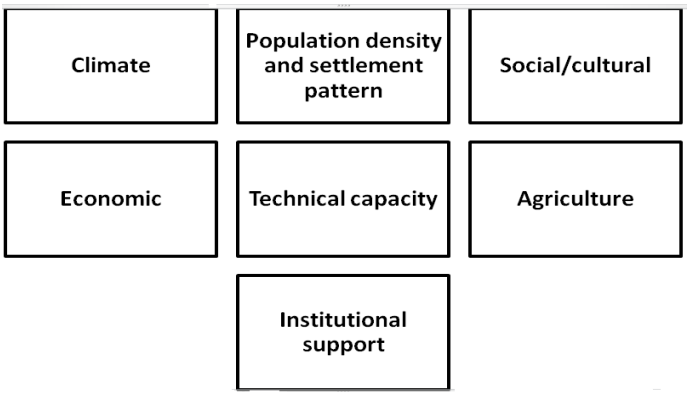

Figure 3. Factors Influencing Design and Management

2.1. Factors Influencing Design and Management

2.1.1. Temperature: Temperature, Humidity, precipitation and solar radiation. In dry areas, it will be easiest to sanitize faeces through dehydration whereas composting may be more successful in humid areas.

2.1.2. Population, Density and Settlement Pattern: The availability of space for on-site/off site processing, storage and local recycling.

2.1.3. Social/Cultural: The customs, beliefs, values and practices that influence the design of the social components of a sanitation system, its acceptability by community.

2.1.4. Technical Capacity: The level of technology that can be supported and maintained by local skills and tools.

2.1.5. Economic: The financial resources of both individuals and the community as a whole to support sanitation system.

2.1.6. Agriculture: The characteristic of local agriculture and homestead gardening.

2.1.7. Institutional Support: Legal framework, extent of support for the EcoSan concept in government, industry, financial institutions, universities and NGOs.

2.2. Dealing with Faeces

The primary processing in an EcoSan system is generally either through dehydration or decomposition, but a combination of both is also possible. The purpose of the primary processing is to destroy pathogenic organisms, to prevent nuisance and to facilitate subsequent transport, secondary processing and end use.

2.2.1. Dehydration: Dehydration means lowering the moisture content of the material min the processing vault or container to less than 25% through evaporation and addition dry material (ash, sawdust, husks). No water, urine or moist plant material must be added to the processing chamber. There is little reduction in volume because of the dry add material, and minimal decomposition of organic material because of the low moisture content. The crumbly pile that remains when faeces dry out is not compost but rather a kind of mulch which is rich in nutrients, carbon and fibrous material.

Dehydration is a way of destroying pathogenic organisms. It does this by depriving them of the moisture they need to survive. At this low moisture content there is little odor and no fly breeding. As there is so little breakdown of organic material, toilet paper or change other things placed in the processing vault will not disintegrate regardless of storage time. Toilet paper must therefore either be handled separately or be composed in a secondary or be composed in a secondary treatment process.

Urine diversion is essential in eco-toilets based on dehydration. Where water is used for anal cleaning, this water should be diverted and can either be treated separately or mixed and treated with the urine.

2.2.2. Decomposition: Decomposition is a complex natural biological process in which organic substances are mineralized and turned into humus. The speed of decomposition is influenced by a number of environmental factors in spite the pile such as the amount of oxygen (aeration), temperature, moisture, pH value, the ratio of carbon to nitrogen (C:N ratio), competition among micro-organisms for nutrients, and the toxic byproducts of decomposing organisms.

2.2.3. Dealing with Liquids: A basic question when designing an EcoSan system is it whether to divert urine and faeces in a single receptacle. If the latter approach is used, effective processing will, with few exceptions, require later separation of liquids and solids.

There are two basic options: divert urine or mix urine and faeces (see Figure 4)

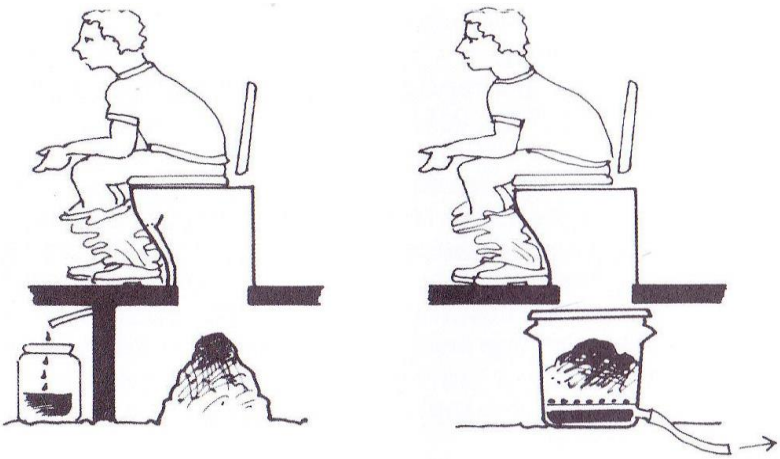

Figure 4. Eco-san Systems have Two Basic Options for Dealing with Liquids: Divert Urine (Left) or Mix Urine and Faeces (Right)

2.3. Diverting Urine

There are a number of good reasons for not mixing urine and faeces shown in Figure 5.

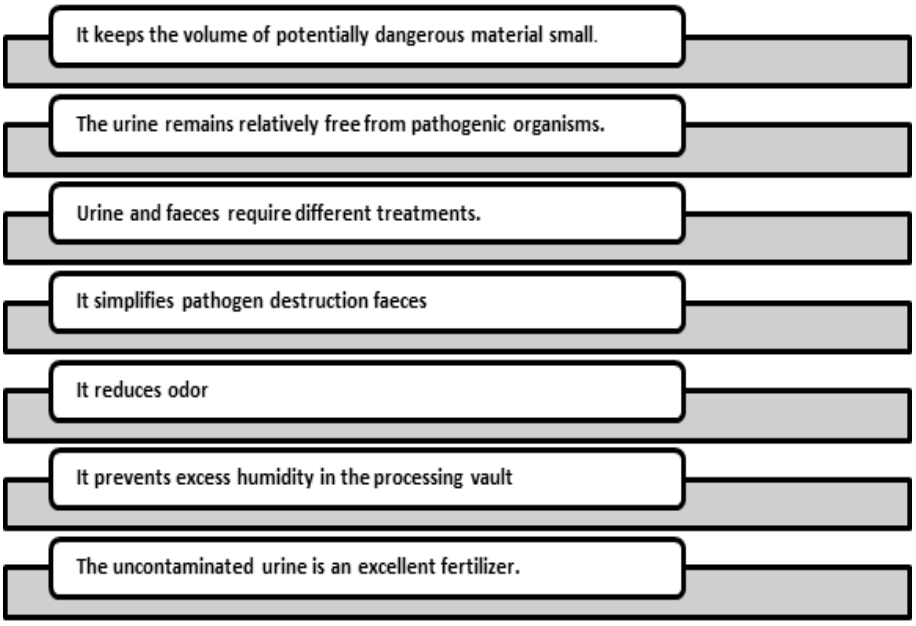

Figure 5. Good Reasons for not Mixing Urine and Faeces

Urine diversion requires a specially designed seat-riser or squatting slab or pan that is functionally reliable and socially acceptable. The basic idea of how to avoid mixing urine and faeces is simple: the toilet user should sit or squat over some kind of dividing wall so that faeces drop behind the wall and urine passes in front of the wall.

The idea of non-mixing urine and faeces is not new. In parts of China, in japan and in other parts of the world simple toilets with urine diversion have been in use for centuries (see Figures 6 and 7).

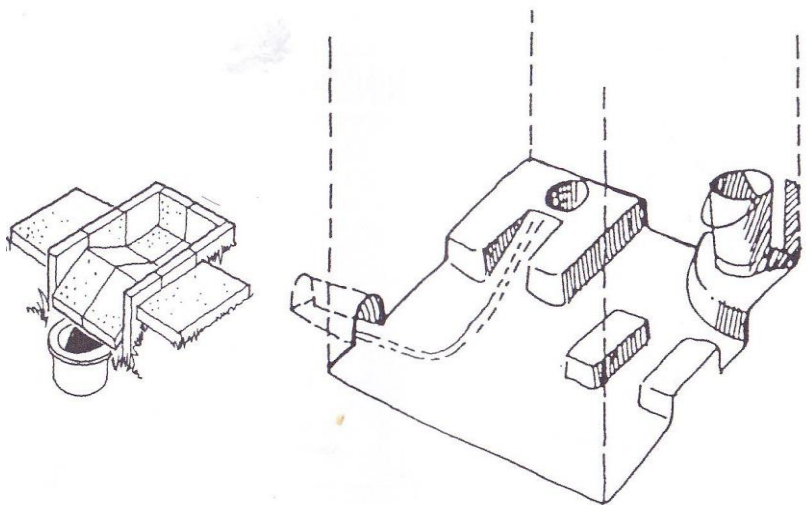

Figure 6. Historical Examples of Urine Diversion

In recent years, several factories have started producing squatting pans as well as seat-risers with urine diversion. The faeces drop down into either a composting or a dehydrated chamber.

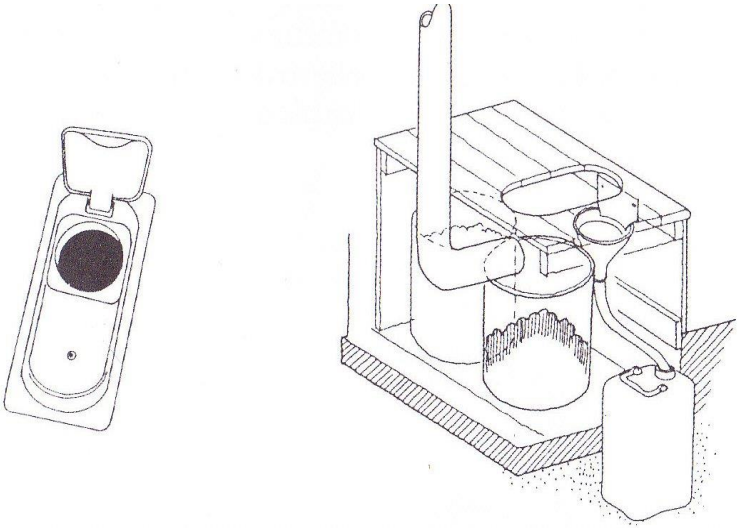

Figure 7. Urine Diversion: To the Left a Prefabricated Squatting Pan from Yongning County, Guangxi Province, China, To The Right A Bench Type Seat Riser From El Alto, Bolivia, Built Of Wood And With A Standard Plastic Funnel As Urine Collector

Once collected, the urine can either be used directly in the garden, infiltrated into an evapotranspiration bed, or stored on site for later collection either as liquid fertilizer or further processed into a dry powder fertilizer (see Figure 8).

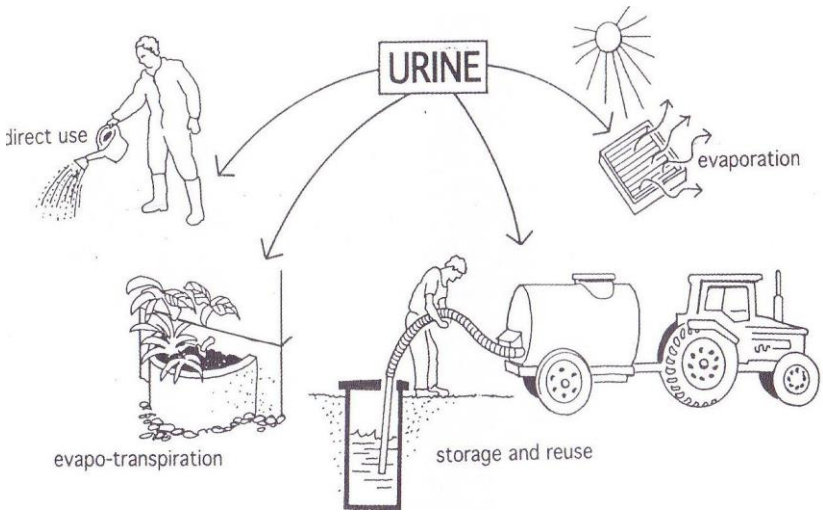

Figure 8. Alternative Ways of Handling Urine Diverted from Faeces: Used Directly Disposed of In an Evapotranspiration Bed, Stored In A Tank For Later Use Or Evaporated

Although urine diverting toilets have a long history the concept is, in most parts of the world, unfamiliar and many people find it hard to believe that they work properly (see Figure 9). Sometimes newcomers to the systems remark that they do not believe they can be used by males. Others question whether they can be used by females.

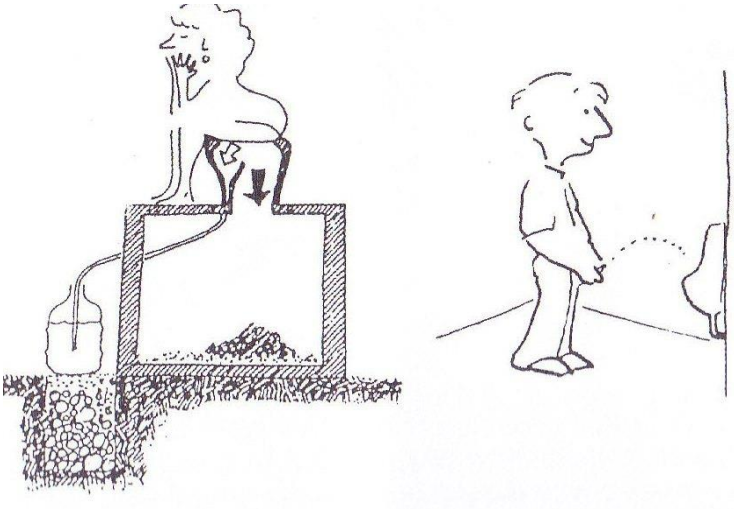

Figure 9. Urine Diversion

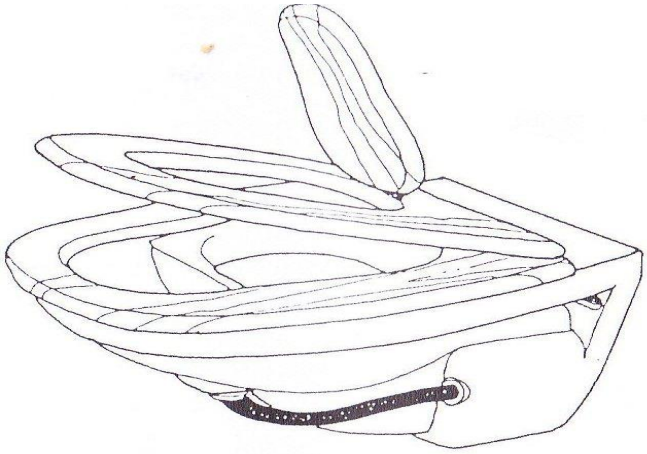

Figure 10. A Swedish Toilet with Urine Diversion

Experience shows that these designs work equally well for both sexes, as long as they squat or sit. Some communities have designed their toilet units with separate urinals for men so that the main seat riser or slab does not have to be used by those who prefer for stand when urinating.

The large size of seats and slabs, however, sometimes poses problem for small children, and some options are designed so that a smaller seat can be pulled down over the larger basic seat riser shown in Figure 10.

2.4. Mixing Urine and Faeces

Systems based on liquid separation do not require a special design of seat riser or squatting plate. Urine, faeces, and in some systems a small amount of water, go down the same hole. Liquids and solids are then separated for example in an “Aquatron”, fixed on top of the processing vault (see Figure 11). This device, developed in Sweden, has no moving parts and simply uses the velocity of the flush to send the liquid around the inner wall of a doughnut-like contraption while the solids fall through a hole in the middle.

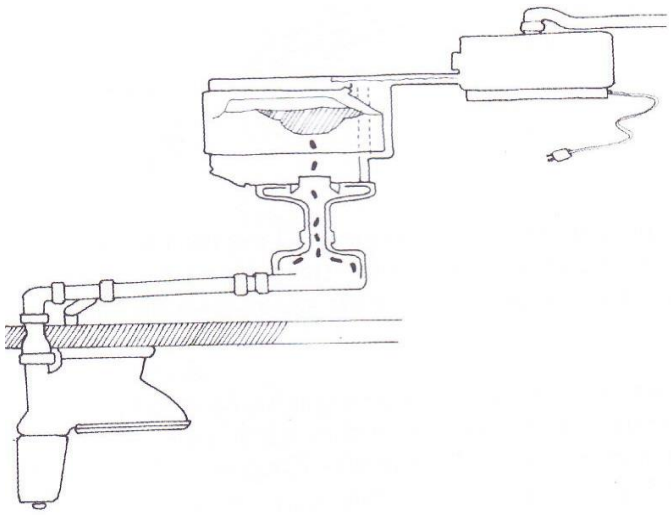

Figure 11. An Aquatron Device for Separation of Liquids and Solids from a Minimum Flush Toilet. The Separator is Placed on Top of a Processing Chamber. The Liquids are Sanitized with Ultraviolet Radiation in a Separate Unit

Another possibility is to drain the liquid from the processing chamber through a net or a perforated floor as shown in Figure 12.

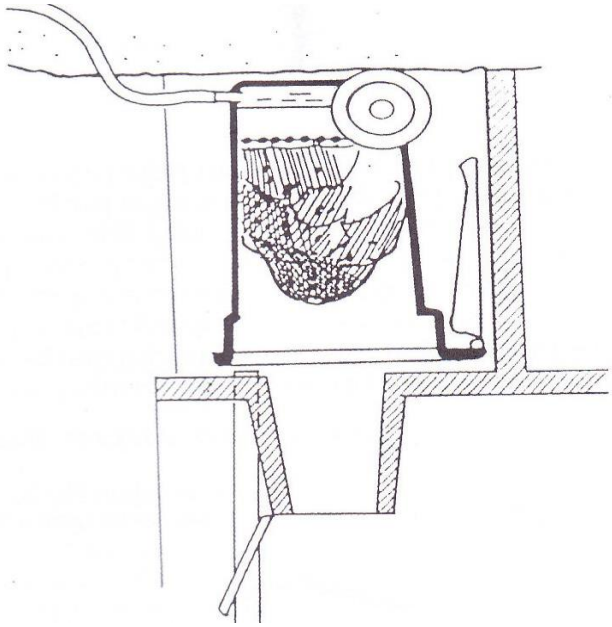

Figure 12. A composting Toilet with Liquid Separation

2.5. Preventing Odors and Flies

Skeptics claim that EcoSan is an inferior alternative; it will be smelly, fly producing and incompatible with modern living. This is valid concern as EcoSan systems are sensitive to bad designs and careless operation. If they are not designed, built and operated directly, taking into account mutual environment, traditional beliefs and the chosen process, they may indeed smell and can even provide a habitat for flies.

Fly breeding in toilets is basically related to the wetness of the contents of the processing vault. In a properly functioning dehydration system there would be no fly breeding but it something goes wrong and the content turn wet, fly bleeding might occur.

The risk of fly breeding is greater in a composting system for two reasons: it works with a much higher process moisture content and fly eggs may be introduced into the processing vault with kitchen scraps. When a properly selected and well-built toilet fails, the most common fault is that the process has turned wet. In a system on dehydration the moisture content of the contents of the processing vault should quickly be reduced to less than 25% through the addition dry additives and ventilation—in some cases helped by the addition of a solar heating device. In system based on decomposition, the corresponding moisture content should ideally be between 50% and 60%. If this is achieved and fresh faeces are covered with an absorbent, there is no smell, no fly breeding and rapid pathogen destruction

3. Household or Communal Removal and Treatment

3.1. Household Management

Probably, the most unfamiliar aspect of ecological sanitation options is that they may require some handling or processed or partly processed human excreta as the household level. In some existing EcoSan projects this has been necessary because the projects were small and scattered. Each household therefore had to manage the total system: daily care of the eco-toilet; weekly/monthly emptying of the storage tank for urine; recycling of urine in the garden; monitoring the primary processing chamber for faeces; half yearly emptying of the processing chamber, secondary processing of chamber content; and the end use of the sanitized material. With proper motivation and instruction , thin the garden; monitoring the primary processing chamber for faeces; half yearly emptying of the processing chamber, secondary processing of chamber content; and the end use of the sanitized material. With proper motivation and instruction , thin the garden; monitoring the primary processing chamber for faeces; half yearly emptying of the processing chamber, secondary processing of chamber content; and the end use of the sanitized material. With proper motivation and instruction this management by the household can work well.

The advantage of this approach is that the user gets a direct feedback and can gradually improve his/her operation: take greater care in not allowing urine and water into the processing chamber, increase the amount of ash/lime, *etc*.

Problems tend to occur when new tenants/owners are taking new tenants/owners are taking over. As eco-toilets are still relatively unfamiliar the risk is that the new comers do not understand how to use them. And without instruction, they would not know why and how to empty urine tank and processing chamber, or about the need for secondary processing.

3.2. Communal Management

For larger projects, particularly in urban areas, the output from EcoSan toilets can be monitored, collected, further processed and sold by a municipal or private organization,

Secondary treatment can be carried out at neighborhood or centralized collection centers, called eco-stations with trained personnel.

Communal management has two main advantages: it is more convenient for the user and safer for public health. The user only needs to operate and maintain the eco-toilet. EcoSan therefore offer the same standard of convenience as conventional WC connected to a centralized sewer. As a handling, processing, transport and sale of the urine and faeces is taken care of by trained staff of the service organization, end products of a consistent quality can be assured.

4. Conclusions and Recommendations

All sanitation technologies require maintenance to function properly. The amount of maintenance that users of EcoSan systems need to do varies a great deal and is influenced as much by the organization of operation and maintenance as by design of the EcoSan devices.

Good system design can minimize the need for intense maintenance, and the tasks required need not to be onerous. All systems require periodic inspection and removal of the end products. Particularly urine collectors, pipes and containers/tanks need to be monitored. Urine pipes should be flushed periodically to avoid accumulation of deposits, which can block the flow and generate unpleasant odors.

The major common element in the maintenance of Eco-San is that the user must ensure that the system is working properly. However, it is important to note that many operation and maintenance functions such as emptying of toilet vaults, transport and secondary treatment, can be carried out by special service providers, either as a public service or through private enterprise.

References

[1] U. Winblad and M. Hebert, "Ecological sanitation (Revised and Enlarged Edition", Stockholm Environment Institute, **(2004)**.
[2] S. Esrey, J. Gough and D. Rapport, "Ecological Sanitation", Stockholm, SIDA, **(1998)**.
[3] C. Lüthi, A. Panesar, T. Schütze, A. Norström, J. McConville, J. Parkinson, D. Saywell and R. Ingle, "Sustainable sanitation in cities: a framework for action", Sustainable Sanitation Alliance (SuSanA), International Forum on Urbanism (IFoU), Papiroz Publishing House, **(2011)**.
[4] T. U. Ganiron Jr., "Measuring levels of end-users' acceptance and use of UDDT", International Journal of U-& E-Service, Science & Technology, vol. 8, no. 3, **(2014)**, pp. 77-88.
[5] H. Joensson, A. Stintzing, B.Vinneras and E. Salomon, "Guidelines on the use of urine and faeces in crop production", Stockholm Environment Institute, Sweden, **(2011)**.
[6] D. T. Martinez, T. U. Ganiron Jr. and H. S. Taylor, "Use of fluidized bed technology in solid waste management", International Journal of U-& E-Service, Science & Technology, vol. 7, no. 1, **(2014)**.
[7] S. Huuhtanen and A. Laukkanen, "A guide to sanitation and hygiene for those working in developing countries", University of Applied Sciences Publication, Tampere, **(2006)**.
[8] S. Matsui, "The potential of ecological sanitation", Japan Review of International Affairs, **(2002)**.
[9] P. Bracken, A. Wachtler, A. Panesar and J. Lange, "The road not taken: how traditional excreta and greywater management may point the way to a sustainable future", Water Science & Technology: Water Supply, vol. 7, no. 1, **(2007)**, pp. 219-227.
[10] "WHO Guidelines for the Safe Use of Wastewater, "Excreta and greywater", Excreta and greywater use in agriculture, Geneva, Switzerland, vol. 4, **(2004)**.
[11] C. Schönning, "Recommendations for the reuse of urine and faeces in order to minimize the risk for disease transmission", Swedish Institute for Infectious, Disease Control, Solna, Sweden, **(2003)**, p. 296.
[12] A. Shayo, "Acceptance of EcoSan concepts in Tanzania" A study of piloting ecological sanitation Majumbasita Dar Es Salaam", **(2003)**, p. 172.
[13] S. A. Esrey, *et al.*, "Closing the Loop, Ecological sanitation for food supply", SIDA, UNDP, Mexico, **(2001)**.
[14] R. Otterpohl, "Resource efficient wastewater concepts- technical options and initial experience", Institute of Municipal and Industrial Wastewater Management, TUHH, Technical University of Hamburg-Harburg, Germany, **(2003)**.
[15] R. Otterpohl, "New technological development in ecological sanitation", Technical University of Hamburg-Harburg, Germany, **(2003)**.
[16] GTZ, Urine diverting dry toilets programme dissemination (data sheet), GTZ, Germany, **(2005)**.

Author

Dr. Tomas U. Ganiron Jr obtained his Doctor of Philosophy in Construction Management at Adamson University (Philippines) in 2006, and subsequently earned his Master of Civil Engineering major in Highway and Transportation Engineering at Dela Salle University-Manila (Philippines) in 1997 and received Bachelor of Science in Civil Engineering major in Structural Engineering at University of the East (Philippines) in 1990. He is a registered Civil Engineer in the Philippines and Professional Engineer in New Zealand. His main areas of research interest are construction engineering, construction management, project management and recycled waste materials. He has been the resource person in various seminars in New Zealand (like in Auckland University of Technology, University of Auckland and University of Canterbury). He was connected with Advanced Pipeline System in New Zealand as Construction Manager wherein he supervised the sewerage and waterworks projects. He was the former Department Head of Civil Engineering in FEATI University (Manila) and former Department Head of Physics in Emilio Aguinaldo College (Manila). He is also very active in other professional groups like Railway Technical Society of Australasia and Australian Institute of Geoscientists where he became committee of Scientific Research. He has received the Outstanding Civil Engineer in the field of Education given by the Philippine Media Association Inc. (1996), ASTM Award CA Hogentogler (2008) by IPENZ in New Zealand and Outstanding Researcher (2013) in Qassim University, Buraidah City. On the second week of February 2015, Dr. Ganiron Jr. was included in the Ranking of Scientists according to Google Scholar Citation public profile (http://www.webometrics.info/en/node/81).

