International Journal of u- and e- Service, Science and Technology
Vol.8, No.5 (2015), pp.55-66
http://dx.doi.org/10.14257/ijunesst.2015.8.5.06

Design and Implementation of Automobile Lights Control System Based on LIN Bus

Xu chunyan[1], Jiang Feng[2], Zhao Yunning[3] and Xu Tao[4]

[1] *College of Computer Science and Technology Beihua University Jilin City, 132021, P.R. China xuchunyanjsj@163.com*
[2] *College of Computer Science and Technology Beihua University Jilin City, 132021, P.R. China.ji_jf001@163.com*
[3] *Schools of Management and Economics China University of Geosciences Wuhan City, 430074, P.R. China*
[4] *Vico Science and Technology Development Co.Ltd. Jilin City, 132021, P.R. China*

Abstract

In this paper, the problems of traditional wiring harness, Using electronic, computer and communication technology, control system of automobile lights was developed based on the LIN protocol, t according to the LIN protocol to develop and design of an intelligent master node and slave nodes，Completed the hardware selection and circuit design of a master node and slaves, and software analysis and program implementation, forming a part of the body electronic control system, the application works well.

Keywords: *Automobile Lights control system; LIN bus; TJA1020*

1. Introduction

After the rapid development of electronic technology, especially microcontrollers and automotive bus technology enter control car field, to car development has brought great changes, large number of applications of electronic devices, will inevitably lead to an increase in vehicle wiring and complexity, reduced operational reliability, fault repair more difficult. In particular the introduction of a large number of electronic control unit, the system requires a large number of data can be shared among different electronic units, vehicle integrated control system also requires a large number of control signals exchanged in real time, a conventional harness connections can not meet this demand [1]. Solve the drawbacks of traditional automotive wiring harness commonly used in control, to improve humane and intelligent of auto body electronic control system, to reduce the wiring harness, reduce costs and achieve the purpose of information sharing, improve the reliability and maintainability of the system. LIN bus protocol is the low-end applications for vehicle multiplexing serial protocol, compliance with SAE (Society of Automobile Engineering) provides vehicle network Class A standards, is a low-cost serial communication network for the realization of distributed automotive electronic control system. LIN protocol with a single master multi-slave organization, to ensure that the delay time of signal transmission; optional message frame length, 4 and 8 bytes; time synchronization with multicast, received from the local node without quartz or ceramic resonator ; to use the minimum cost of semiconductor components small patch single-chip systems. The master node controls the communication of whole network, there is no communication conflict [2]. The network configuration information contains only the primary node, slave node can freely access to or out, the communication network does not affected.

ISSN: 2005-4246 IJUNESST

2. System Hardware Design

2.1 Overall Structures

On the hardware selection, positioning in the technology industry direction, selection focus on cost, performance requirements to meet the control requirements while prices and costs as low as possible, the entire hardware system is composed of a controller AT89C51, transceiver TJA1020 master control unit[3]. P89LPC921, transceiver TJA1020 and intelligent switch MC33291 [4] constitute the slave control unit. In this system, a master control unit, the four slave control unit, consisting of a total of five parts: a master station, the two slave stations front and rear of automobile, after receiving the master switch signal, the first analysis and processing it, and then send control commands to each slave station via the LIN bus, after the slave station response, making the appropriate action, the control terminal of slave station only receives the instruction of master station, executed according to the requirements of the master control terminals, and the results fed back to the master station to perform the control terminal, the overall system structure shown in Figure 1.

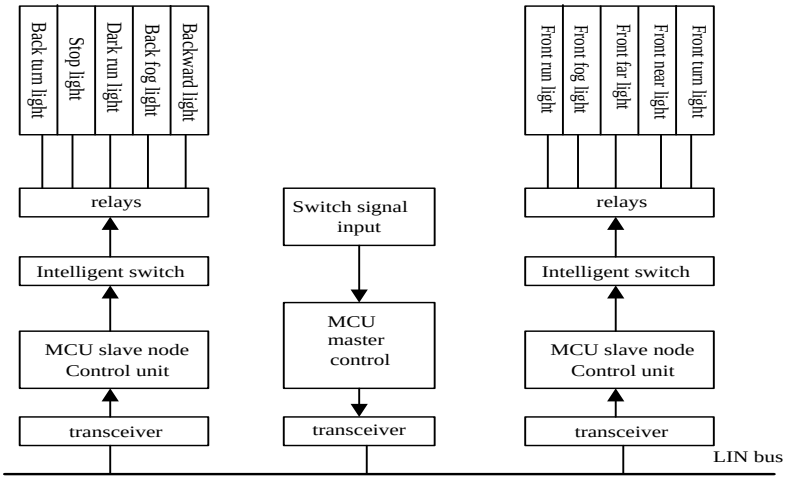

Figure 1.System Structure

2.2 LIN The Basic Concept

Lin is a low-cost car in serial communication network control protocol for distributed electronic systems implementation. LIN goal is to provide accessibility to existing automotive network (eg CAN bus), LIN is a hierarchical network using a boot factor in automotive vehicles. LIN standardization will reduce reuse existing low-end multiplex solutions and will reduce automotive electronics development, production, service and logistics costs. Therefore, the use of LIN bus can greatly reduce the cost of the car. Here is a car with a rate of several network protocols and corresponding curves corresponding to each node communication costs. LIN standard includes transport protocol specification, transmission media specification; development tools interface specifications and software programming interface specifications. LIN ensures the interoperability of network nodes in hardware and software, and predictable EMC features [5]. This specification includes three main parts, the following is figure 2.

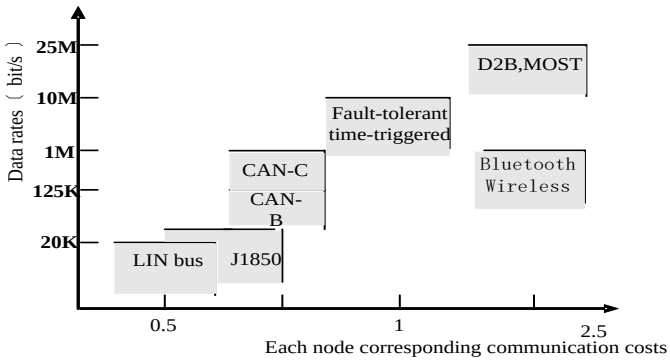

Figure 2. The Main Network Protocols in Vehicle

1. LIN Protocol Specification section describes the physical layer and the data link layer.
2. LIN configuration language describes the format of the configuration file. LIN configuration file is used to configure the network and as a common interface for OEM and between suppliers of different network nodes, while as an input to develop and analysis tools [6].
3. API section describes the interface between the network and applications.

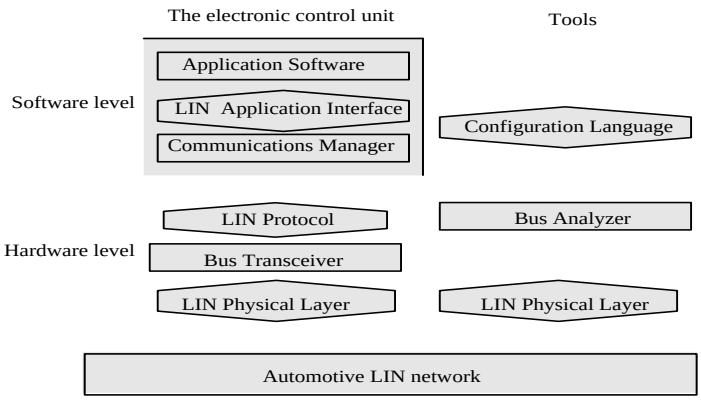

Figure 3. LIN Specification Range

2.3 Host with AT89C51 Microcontroller

Integrated LIN microcontroller AT89C51 is a low power / low-voltage, high-performance CMOS 8-bit microcontroller. AT89C51 provides the following standard features: supports two optional node modes. Idle mode, CPU stops working, but system allows RAM, timer / counters, serial port and interrupt system to continue working, Power-down mode, save the contents of RAM, but the oscillator is stopped and banned all other components work until the next hardware reset[7]. Characterized in that:
a) Fully compatible with the MCS-51 instruction set and pinout;
b) 4K bytes of flash memory can be re-erasable Flash;
c) 1000 times erase cycles;
d) Fully static operation: 0-24MHz;
e) Three encryption program memory;
f) 128 x 8 bytes of internal RAM;
g) 32 programmable I / O port lines;
h) 2 16-bit timer / counter;
i) 6 interrupt sources;

j) Programmable serial UART channels;

2.4 Slave Machine P89LPC921 Microcontroller

P89LPC921 is a single-chip microcontroller for applications demanding highly integrated, low-cost applications. Meet a wide range of performance requirements. P89LPC921 uses a high-performance processor architecture that executes instructions in two to four clock cycles. P89LPC921 integrated a lot of system-level functions, has an enhanced UART, It is compatible with the conventional 80C51 UART, with one exception, which can use an independent baud rate generator baud rate. P89LPC921 include an independent Baud Rate Generator. The baud rate can be selected from the oscillator (divided by a constant frequency), timer 1 overflow, or the independent Baud Rate Generator. In addition to generating the baud rate, based on the standard 80C51 UART include framing error detection, break detection, automatic address recognition, selectable double buffering and several interrupt options[9]. It can greatly reduce the number of components and board space, reducing system costs.

2.5 LIN Transceiver TJA1020 Performance and Features

TJA1020 is a LIN interface of master / slave protocol controller and LIN physical bus (Local Interconnect Network). Mainly used as a vehicle in the secondary network. Baud rates up to 20Kbits / s; extremely low electromagnetic emission (EME)[10]; Input level is compatible with 3.3V and 5V devices; In sleep mode current consumption is very low, enabling local or remote wake-up; LIN bus has a short-circuit protection on battery; Overheat protection; Figure 4 is a block diagram of TJA1020.

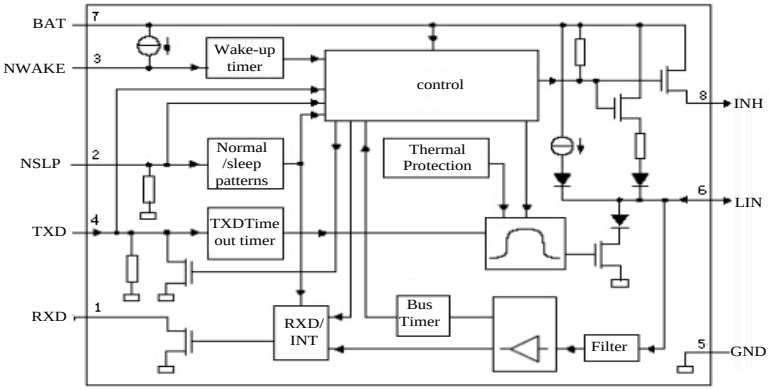

Figure 4.TJA1020Structure Diagram

2.6 Chip Pin Connection

The main control MCU: P0 and P2 ports of AT89C51 directly used as a switch input interface. It is directly connected to the electrical vehicle switch, to absorb some of the external interference pulses cause the host malfunction, So switch input pin made filter circuit to absorb interference pulses, Meanwhile, in the program the signals of keyboard scan also software filtering, the keyboard as much as possible the chance of malfunction to a minimum., P3.6 is connected the SLP signal input port of TJA1020, MCU TXD, RXD are respectively connected TXD, RXD of TJA1020 ,the Vcc of 89C51 supply-side and / EA enable termination is 5V high. Oscillation: Crystal Oscillator XTAL1 and XTAL2 indirect 11.0592MHz [11].

Slave Controller: The controller uses P89LPC921, chip has 15 I / O ports, when using the internal reset and the internal RC oscillator chip has 18 I / O ports, CPU's TXD, RXD and P1.2 are connected with the TXD, RXD and SLP of TJA1020, P1.3, P1.4, P1.6, P1.7

is respectively connected to select CS of MC33291 chip, clock input SCLK, data input SI and the reset pin RST. CPU controls MC33291 via these pins, to complete the command execution of slave machine. Circuit connection is shown in Figure 5, the output of MC33291 drives relay, respectively, to control the bright lights on and off, Feedback signal of lights working state inputs to the controller by P0 port of CPU, taking into account the lights feedback point are high voltage, high current, so the feedback loop through the electrical wiring opt coupler isolation, improves the stability of the microcontroller work.

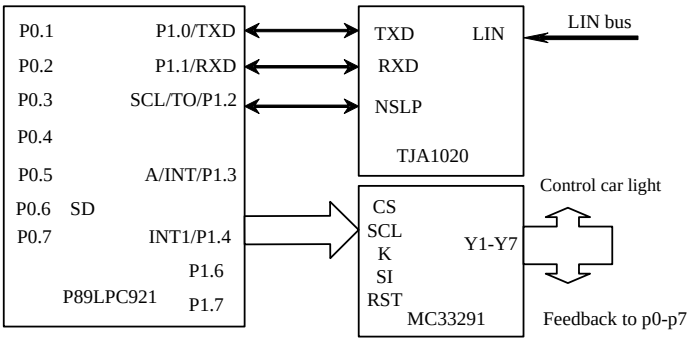

Figure 5.Circuit Connection Diagram

In the hardware circuit design, the master circuit and the circuit node are designed, and reserved for the circuit interface, In order to expand the functions of slave node. LIN transceiver selected using a Philips TJA1020 chip company, it is a baud rate of up to 20Kbits / s controller. the input data stream from TXD pin is converted LIN bus signal through LIN transceiver, Select the Smart Switch method is used to determine the normal mode or low slope mode, Under the baud rate relatively low, using low slope mode, High-speed communication with the normal mode, This design can reduce electromagnetic interference in low-speed applications, ensuring reliable transmission at high speed communication, Transceiver controls waveform and conversion rate, reduces EME and high resistance to electromagnetic interference (EMI).

The design of hardware is modular, in hardware block diagram of the host unit, MCU receives digital signals, switching signals, processed by the ECU, and gave transceiver to convert LIN bus signal, By LIN bus transceiver, after the data of slave are treated by ECU, and then drive terminal, control lights status. It can put the lights status to feedback the controller. Reacted situations of execution and error handling. Host circuit schematics diagram is shown in Figure 6.

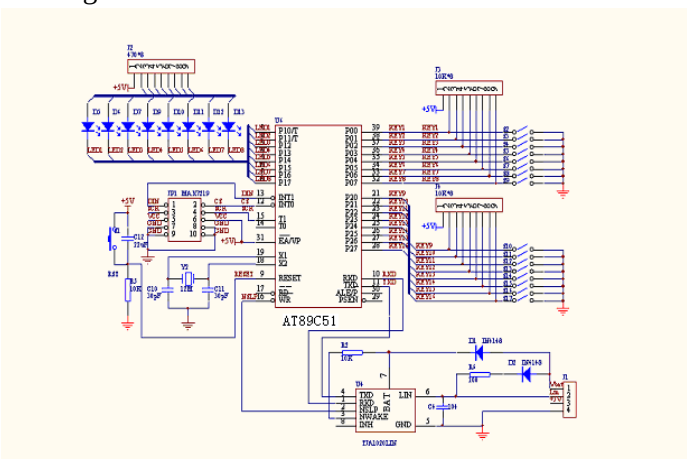

Figure 6. Host Circuit Schematics Diagram

3. System Software Design

3.1 Host Node Software Design

In the software functional design, focusing on synchronization and reliability, such as control functions turn lights flashing on the master node control, thus ensuring real-time and synchronized from the node. Such as control functions of turn lights flashing on the master node is completed, thus ensuring the real-time and synchronization nodes of slave node[12]. In software design, the use of structured programming methods, each program module is written from the protocol layer and application interface layer and application layer, code modification and transplantation is easy.

The system's software development platform uses the powerful language environment prepared keilC51, the software of master controller is constantly scan switch status by cyclic mode, when the status changes, sent LIN function via bus and output corresponding instruction. The entire control of the LIN bus is also is implemented in the host program, the host controls initialization of LIN bus and sends of packet header. And, after receiving status data sent from the control unit to judge, once the slave state of exception, the host can make the appropriate adjustments. Host program is divided into three modules: the protocol layer module, the interface layer module, the application layer module.

3.2 Protocol Layer Modules

Protocol layer module is the core of the system implementation, LIN bus protocol message transmission and frame structure are shown in Figure 7. Which is responsible for the control and use of physical links, and accepts invocations from the interface layer function, where the main sub-functions is as follows:

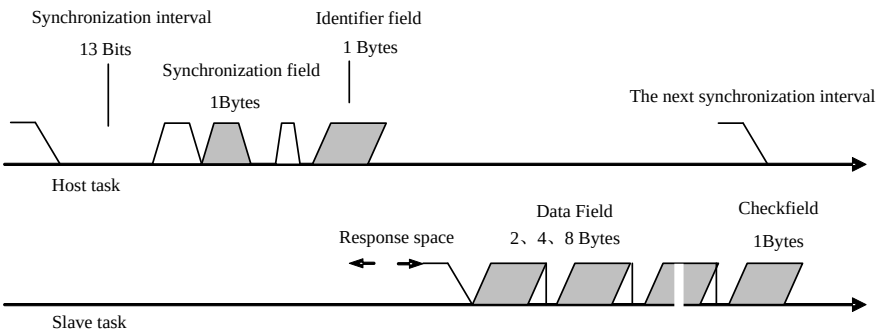

Figure 7. LIN Bus Frame Structure

(1) l_bool l_re_data(l_u8 *temp, l_u8 num)：To achieve the function that host received multi-byte data from slave. After a master controller sends data, If it needs response frame data information from slave, the host was not immediately returned after sending this frame data, Waiting for response data from the slave, in the process of waiting, the slave response is timeout or not to respond, it is considered that the slave is not working, When the host sends repeated five times, and also not responding properly, that is the end of this transmission, and retains the error flag and waits a subsequent error handling function to handle.

(2) void l_se_data(l_u8 *temp, u8 num)：This function can be used to continuously send multiple bytes of data, and at the end of the transmission data can be automatically added to the checksum, data array to be transmitted is passed through a pointer temp, num is the number of data bytes to be transmitted.

3.3 Interface Layer Modules

The interface module is a link bridge of protocol layer and the application layer, which is responsible for converting the application layer command to protocol layer data format, then protocol layer sends the data to the bus, Also, the protocol layer receives the data on the bus is converted to the data format of the interface layer, then interface functions pass the data to the application layer, Application layer makes the final deal. It consists of two main modules:

(1) void l_u8_ptr_wr(l_signl_ s, l_u8 *ptr): It is responsible for passing the application data to the protocol layer; the protocol layer performs control of the bus and sends the data to the bus. When the host requests to send data, the application layer data is first sent to the interface layer, the interface layer immediately receipt of the package the data into a certain data format, and then call the relevant function protocol layer to send the task to complete one frame data.

3.4 Application Layer Module

The software design ideas of LIN application is used finite state machine (Finite-State Machine: FSM) to optimize. Host node the FSM of the software is shown in Figure 8.Application layer unit is divided into four basic modules: Bus communication module void LIN_send (void), the keyboard status detection module void key in (void), keyboard processing module void KEY_ISR (void), turn signal processing module void flash lamp (void), void LAMP_ (void).

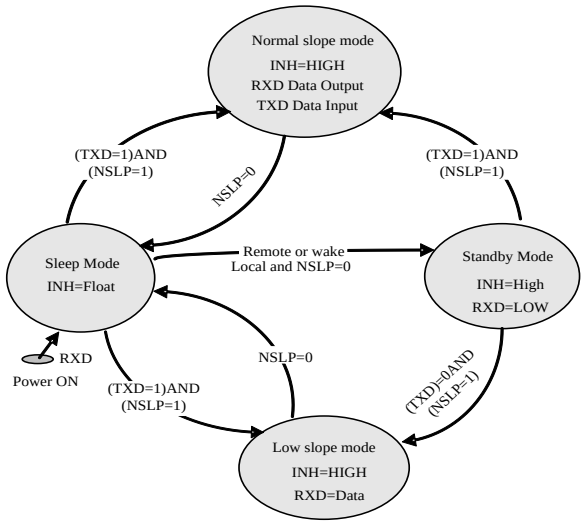

Figure 8. Host Node the FSM of the Software Design for Automobile Light

The program starts running, first initialize the LIN bus, after scanning function successfully transferred to the keyboard status key in ().The function monitored keyboard status flag, If the state change the system calls LIN_send ()to send the command buffer of bytes to the bus. In the control logic for each lights, the turn signal control is more trouble, at the beginning considering the state of the turn signal switch is sent directly to each slave node, the slave nodes after receiving the turn signal "light" command starts a local timer periodically flashes[13]. But it will be a problem, because any one of the system slave nodes are not crystal oscillator, all using the internal RC resonator, RC oscillator frequency due to the discrete nature, would make any one node from the local oscillator frequency is not the same, so when the turn signal flashing, flash node after some time there will not synchronous flashing. Solution to the problem is to use the host to control the blinking cycle, after the host the query to turn lights "light" command, will be set for

each flag, and to start the timer 2 and to complete the required timing requirements of each function. Timer 2 interrupt handler void l_t2_isr () interrupt 5, function is called once per 5ms KEY_ISR (), this function is responsible for the key state of the user to write command buffer. Meanwhile, the interrupt function is called intervals 130ms flash lamp () to control the turn signals state.

(1) void KEY_ISR(void)：Due to get the keyboard data by cycle scan exist inevitable limitations, Chosen interruption way to get the keyboard data. This ensures that keyboard data is not lost in the any valid time. Sensitivity of keyboard input and the keyboard jitter is one pair of conflicting factors, if the sensitivity is too high, can easily cause malfunction, if the sensitivity is too low, there may be missing keyboard data. After several tests and measurement data, the final decision is to enter this function scans every 5ms once keyboard, keyboard flag state is responsible for the query and then put the command byte to write command buffer.

(2) void l_t2_isr() interrupt 5: It is the Timer 2 interrupt handling function, 5ms keyboard scanning signal generation (flag_5ms), Also responsible for the (26 * 5 = 130) ms time interval Invoked flash lamp () to change the turning lights on or off.

3.5 Software Design of Slave Node

The main task of the slave node is receiving external interrupt INT1 to detect RXD level change, Once effective dominant level on the bus, the receiving task will be immediately transferred to an external interrupt handler, In the interrupt reception mode control, In order to complete the receive of synchronization interval and identifier field, If the identifier of the slave are known and valid, continue to receive data field and checksum field, and after receiving the completed correctly, to start a command handler function. If the received identifier is agnostic or non-native valid ID, Subsequently the slave is no longer received the data and waits to receive the next frame data. Due to LIN bus data protocol contains the synchronization signal, slave nodes are stable in the absence of the case of the local oscillator for reliable communication done. The baud rate can be adjusted dynamically by the local receiver software, so as to achieve self-synchronizing for receiver baud rate. Meanwhile, LPC921 chip integrates a hardware watchdog function, and has its own independent oscillator, oscillator failure detection can be used to call the shots, in the process, joined the main function of the watchdog register to cleared of instruction[14]. So once the machine is not working, the watchdog will make the system reset, to ensure reliable operation. The data processing flowchart of the slave node is shown in Figure 9 .

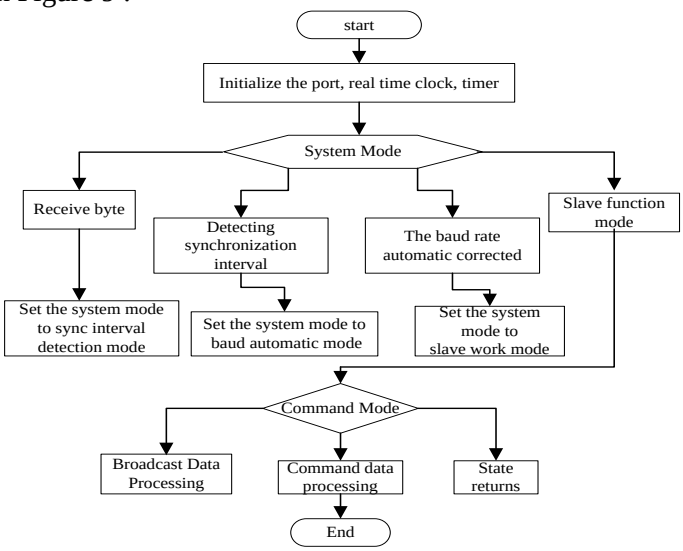

Figure 9. The Data Processing Flowchart of the Slave Node

From the computer program is divided into four modules: communication module Int1_Isr (), l_rce_data (), l_send_back (), data processing module l_cmd_handle (), l_sta_handle (), l_gbs_handle (), the baud rate from the calibration module AutoBaudrate (), porter dog's module l_WD_init (), l_WD_reset ().

(1) void Int1_Isr() interrupt 2：This is the most important functions from the slave, the working of slave is all from the beginning of the function, this interrupt input is RXD signal of LIN receiver output, So, as long as the effective dominant level on the bus from the slave immediately enter the interrupt processing: according to the current schedule to decide to receive the task, according to the results to decide on the next schedule. Schedule is divided into four sections (indicated by MODE0 ~ MODE3).

(2) void AutoBaudrate(void)：It is the baud rate auto-correction function. Baud self-calibration function is a key function from the node, it works properly or not directly affects the received reliability from the slave, all programs add a variety of measures to prevent errors. Within the limits error prescribed of RC oscillator, regarded as a possible frequency drift from the slave, so you can get the possible maximum and minimum of the initial baud rate generator, Baud self-correcting in the end, this data will be considered in comparison with the pre-set value, if not in this range, then discard the results of this calculation. It also incorporates the received multi-bit data obtained by averaging a higher accuracy [15].

After field tests, the system can reliably receive data over a large frequency error, far beyond the scope of 10% of the LIN protocol requirements ±. This fully reflects the correctness of the algorithm.

(1) The slave data processing modules: from the data processing module is divided into three branches: the broadcasting data processing, data processing and command status data processing.

(2) If the data received from the broadcast data, the data is updated in the data bits corresponding to the output of the local, but does not return data. Command data processing function can receive data command for this slave to send, after the correct data received by the slave, the data field returned to the host.

Then according to pre-defined update rules, to update the command to the output. Status handler function with the command handler function, the state handler function does not return the received data; instead, the various states of the slave packed into a certain format returns to the host, to complete the local feedback.

4. Conclusion

This paper presents a cheap solution to control lights base on the LIN bus application. Achieve a digital and intelligent vehicle wiring. Hoping to provide some ideas for LINBUS industrialization in China, so as to improve the overall level of automation of the domestic auto industry. The automotive LIN bus applications, for the automotive electronics industry has a very important value, in order to achieve the bus control of body electronic control system, to form a new generation of vehicle electronic control systems.

References

[1] H. Chaoqun, junT.modern machinery, no. 4, **(2011)**.
[2] X. Mianhai, L. Hongshan, "Modern machinery", no. 4, **(2011)**.
[3] C. Enche, H. Ying and T. Houjun, "Fieldbus Control Technics", vol. 35, no. 4, **(2013)**.
[4] "ZLGMCU Development Limited", LIN - BUS specification V1. 2 versions.
[5] N. Dangen, Y. Wei and Z. Wei, "Automotive Engineering", vol. 29, no. 7, **(2007)**, pp. 597 －600.
[6] C. Anyu, Y. Xi and F. Huizong, "Computer Measurement & Control", vol. 20, no. 12, **(2012)**, pp. 3193 －3196
[7] T. Haoqiang, The C Programming (second edition).
[8] L. Jianzhong, "Principle and Application of MCU", Xi'an University of Electronic Science and Technology Press.
[9] M. Zhongmei, "C language application design of MCU", Beijing University of Aeronautics and Astronautics Press.
[10] Z. Dinghua, "SCM principles and interface technology experiments", Tsinghua University Press.
[11] Freescale MC9S08D2128 Datasheet［EB/OL］(2008－04)[2010 －06 －10]. http://www.freescale.com/.
[12] Freescale MC9S08MP16 Datasheet［EB/OL］(2008－04)[2010 －06 －10]. http://www.freescale.com/.
[13] Z. Xi, D. Lijun and Q. Keqing, "Electronic Engineering & Product World", no. 3, **(2008)**.
[14] G. Xiacheng, "A real-time kernel based on the time sheet in the body control applications", embedded systems applications featured 200 cases.
[15] C. Daifu, "Automation &Instrumentation", no. 6, **(2008)**, pp. l-9.

Authors

Xu Chunyan, MAY 26,1966yichuncity. Heilongjiang
Current position, grades: Associate Professor
University studies: Computer
Scientific interest: Computer and Electric Automation
Publications <number or main>: seven papers
Experience: Xu Chunyan, in 1999 graduated from the electrical automation of Beijing Iron and Steel Institute, now working Department of Computer Science and Technology of Beihua University in Jilin City, Associate Professor, the main research directions for Computer and Electric Automation, be interest in Electronics and computer aspects, Participated in 863 projects. Has published a textbook and seven papers.

Jiang Feng, March 2,1959jilincity.jilin
Current position, grades: professors
University studies: Computer and Electronic Information
Scientific interest: Computer and Electronic Information
Publications <number or main>: seven papers
Experience: Jiang Feng, now, now working Department of Computer Science and Technology of Beihua University in Jilin City, Professor, Presidd over the completion of the national "Eleventh Five-Year" 863 major projects an electric car, "second five" 863 electric car project a major project;

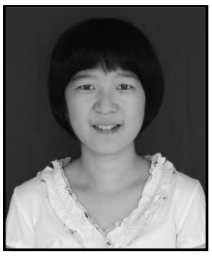

Zhao Yunningi, May 23, 1993 Jilincity.Jilin
Current position, grades: an undergraduate student
University studies: Project Management
Scientific interest: Electric Automation and Project Management
Publications <number or main>: one paper
Zhao Yunning, now, an undergraduate of Department of Management and Economics of University of Geosciences in Wuhan City, the main research directions for Project Management, interested in Electric Automation and Project Management aspects, has published one paper..

Xu Tao, December 13, 1973 Jilincity.Jilin
Current position, grades: Intermediate Engineer
University studies: Electric Automation
Publications <number or main>:
Xu Tao, in 1996, graduated from Jilin University of Automation and Control professionals, now working Engineering Training Center of Beihua University in Jilin City, the main research directions for the Electric Automation, be interest in Electrical and Electronic aspects, Participated in 863 projects.

