International Journal of u- and e- Service, Science and Technology
Vol.7, No.1 (2014), pp.103-112
http://dx.doi.org/10.14257/ijunesst.2014.7.1.10

Calculation Method on Reliability of Logistics Service Supply Chain Based on Stochastic Petri Nets

Yang-zhen Li[1,2] and Hai-yan Yi[1]

[1]*Department of Transportation & Logistics , Southwest Jiaotong University, No.111 Erhuan Road, Chengdu City, Sichuan province, P.R.CHINA, 610031*
[2]*Department of management, Southwest University of Nationalities, No.16 Yihuan Road, Chengdu City, Sichuan Province, P.R.CHINA, 610041*
zhenly629@163

Abstract

Logistics service supply chain provides the customer with integrated logistics service, and reliability is the essential character of logistics service. Logistic capacity and two-echelon structure of logistics service supply chain is analyzed in this article, and the reliability problem of logistics service supply chain is modelled based on stochastic Petri nets, then reliability index (steady state availability and reliability) is also analyzed, which provides indispensable information to reliability management of logistics service supply chain.

Keywords: *Logistics service supply chain; logistics capacity; stochastic Petri nets; steady state availability; reliability*

1. Introduction

When a logistics customer needs integrated logistics service, and it is difficult for a single logistics enterprise to meet the demand of logistics service, logistics service supply chain (Hereinafter referred to as LSSC) becomes the trend of the development of logistics industry. From the earliest functional logistics service supplier to the logistics service integrators to the end customer, LSSC has a supply and demand cooperation chain structure in providing professional logistics service process [1]. LSSC can provide integrated logistics service to customer and logistics service quality is the key to success in the LSSC market. Logistics service quality can be measured from three aspects: accessibility, operation performance (including speed, consistency, flexibility and failure and recovery four aspects) and service reliability [2], and reliability is the core of logistics service quality which logistics customer can be perceived, and directly affects core service benefit of logistics enterprise[3]. Therefore LSSC reliability also became one of the hot research hot spot.

LSSC reliability reflects the reliability of the logistics service [4], the LSSC reliability analysis is through the analysis of system reliability index, finding the system weak link and design flaws, making sure to improve the reliability of the logistics service, improving the satisfaction degree of logistics service. The current on system reliability analysis model are mainly reliability block diagram, failure tree, event tree, random process, Petri net and its extension model, *etc*. Petri net is a complex system reliability modeling and a powerful analytical tool, which can well consider time characteristic and dynamic behavior of system.

Petri net theory is proposed by Carl A. Petri doctor the earliest in 1962 in his doctoral dissertation, used to describe the computer system the causal relationships between events. Petri nets are early used in failure analysis [5], reliability evaluation [6]. In recent years, Petri nets widely used in complex system reliability analysis[7] , such as literature [8] using the

ISSN: 2005-4246 IJUNESST
Copyright ⓒ 2014 SERSC

stochastic Petri nets to analyze repairable system modeling which is made up a class of different personnel and machines and find out the system reliability; literature [9] puts forward a random coloring Petri nets to analysis supply chain system reliability; literature [10] puts forward a Petri net model which can be used for urban rail transit system reliability, this model divided urban rail transit system into multiple object class, and constructed the system reliability analysis model; dynamic reliability of discrete event system was analyzed using Petri nets in literature [11], in order to avoid the state space explosion problem of reach diagram, transform Petri nets accessibility into certification of linear logical sequence of events, and the step and an example of method were also analyzed.

In this paper, Stochastic Petri net (Hereinafter referred to as SPN) is used to analyze the reliability of the LSSC, providing the necessary information for LSSC reliability design and reliability management.

2. Reliability Block Diagram of LSSC

2.1. The Concept of LSSC Reliability

There is no unified, authoritative definition of LSSC reliability, according to the national standard of The People's Republic of China, GB3187-82《reliability basic noun terminology and definition》and literature [12], the author considers that LSSC reliability is: in the interference of external factors, within the prescribed time and conditions, ability of LSSC completing logistics demand function, and the probability completing the function is reliability.

LSSC can be regarded as a system, and enterprise in the system can be called node one. LSSC system is a maintenance system. When LSSC fails to provide logistics service to customer, there is the service failure in the reliability management. This service failure can be recovered through the service maintenance or service recovery. When the system meets the risk or accident, LSSC node enterprise is adaptive, who can return to normal or near normal state through the maintenance system, of course, service maintenance can increase the total cost of LSSC system. If remedial measure of logistics service is effective, on the contrary, logistics service failure has the positive role to establish a good relationship t with logistics customers. There is obvious difference between logistics service failure and product failure, because fault product is not likely to regain the quality level of before failure through maintenance in classical reliability theory. So, essentially, LSSC system is a maintenance one.

2.2. Analysis on Structure of LSSC

LSSC is an essentially service supply chain based on ability cooperation. Here's ability cooperation may be due to the shortage of the capacity of logistics service integrators itself, it is also possible that service integrators itself did not have this ability and need to buy the logistics service capacity with functional logistics service providers. In token D of logistics capability demand of customer , in token S_0 of logistics capability of logistics service integrators, in token $D_i, (i = 1, 2, \cdots, n)$ of logistics capability order of functional logistics service provider i, in token $S_i, (i = 1, 2, \cdots n)$ of logistics capability of functional logistics service provider i. If $D \le S_0$, then logistics ability of logistics service integrators can meet the logistics customer logistics requirements; if $D > S_0$, logistics ability of logistics service integrators can't meet the logistics customer logistics requirements, In this case, Only through

 Copyright ⓒ 2014 SERSC

the logistics capability of functional logistics service provider in the market supply, logistics service integrators finally can provide customers the complete logistics service. If ability of functional logistics service provider is greater than the demand, namely $D_i < S_i$, at this time, the structure of LSSC becomes two-echelon one, see Figure 1. If ability of functional logistics service provider is less than the demand, namely $D_i > S_i$, the structure of LSSC becomes three-echelon one. In this paper, two-echelon structure of LSSC is only considered [13].

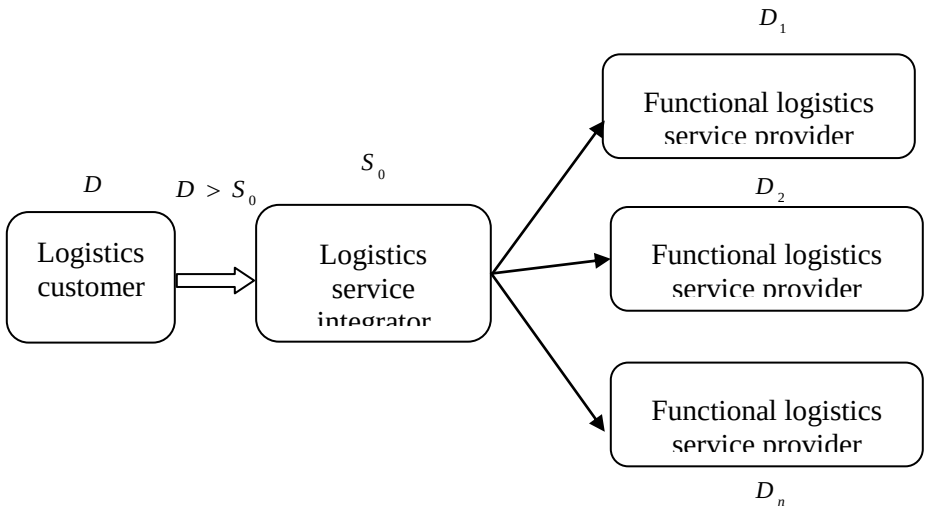

Figure 1. Two-echelon Structure of LSSC

Two functional logistics service provider in two-echelon structure of LSSC is only considered in this paper, and the structure of LSSC is shown in Figure 2, in digital sequence labeling each node of the enterprise of LSSC.

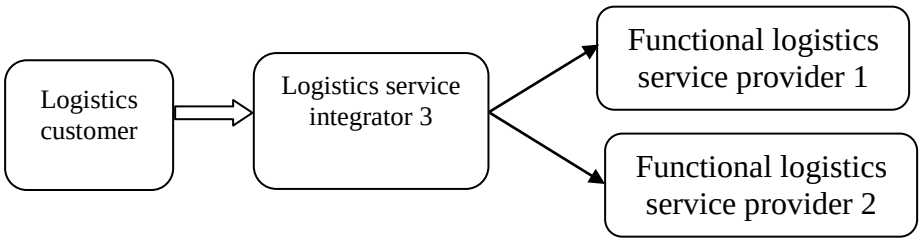

Figure 2. Two-echelon Structure of LSSC which Contains 3 Node-companies

2.3. Reliability Block Diagram of LSSC

The logistics capability has a variety of operational type, such as transport capacity, storage capacity, *etc*. In Figure 2, there are two kinds of circumstances, one is that logistics capability provided by the functional logistics service provider may be the same type, such as all capacity are transport capacity; the other is that logistics capability provided by the functional logistics service provider is not the same type, such as some are transport capacity and some others are storage capacity. If logistics capability type provided by functional logistics service provider is the same, functional logistics service providers exist competition between them, so the subsystem structure is parallel-connection one from the point of reliability block diagram theory, the connection between this subsystem and logistics service integrators constitute a series one, the system reliability block diagram is a parallel-series structure, as shown in Figure 3.

Copyright ⓒ 2014 SERSC

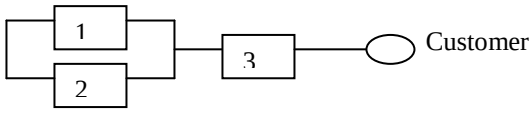

Figure 3. Parallel-series Connection of LSSC

If logistics capability type provided by functional logistics service provider is not the same, the relationship of operation provided by them is cohesive one, cannot substitute mutually, connection structure of node enterprise is series from reliability block diagram, and the reliability block diagram is shown in Figure 4.

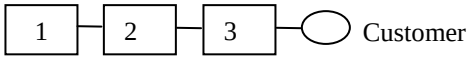

Figure 4. Series Connection of LSSC

These two kinds of structure as the basic structure of LSSC, any complex structure of LSSC systems can be decomposed into these two kinds of structure.

3. Analysis on Reliability of LSSC Based on the Stochastic Petri Nets

If there is any service failure in the logistics operation process of node enterprise of LSSC, the node enterprise will mobilize resources for service maintenance. LSSC system is working and has not yet occurred fault in a moment of time, after this moment, the system fails to offer logistics service, the probability of failure is the failure rate. After system failure, the system completes the repair or maintenance under specified conditions and within the prescribed period of time, the probability for repair is repair rate, which describes the system repair difficulty level. Hypothesis service failure rate $\lambda_i\left(i=1,2,3\right)$ and service repair rate $\mu_i\left(i=1,2,3\right)$ of node enterprise obey exponential distribution. Due to the service failure occurred in different logistics enterprise, there is no maintenance resource conflicting phenomenon. Reliability, availability are important index of the system reliability. Reliability is a probability index which can measure service failure difficulty degree of LSSC system in a stable time, and availability is a probability index which reflecting the utilization rate of LSSC after logistics service repair. A good service product can quickly find fault to repair after the failure, steady-state availability can be to measure such requirements, therefore, in the practical management, people are more concerned about the availability of the steady state condition namely steady-state availability. Below LSSC system steady-state availability and reliability index is analyzed.

3.1 Analysis on Reliability of Series Connection

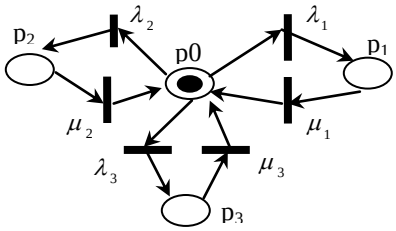

Figure 5. LSSC Reliability Model when Connection is Series based on Stochastic Petri Nets

 Copyright ⓒ 2014 SERSC

When the logistics capability provided by different logistics service provider is not the same, for example, transportation and storage, which are different logistics capability, then the reliability block diagram for the LSSC is series-connection structure, whose corresponding SPN model is as shown in Figure 5, in which place p_0 represents the normal working state, and token indicates system is in normal working condition in the starting time, and place $p_i(i=1,2,3)$ represents service failure state caused by node ***i*** enterprises. The situation of logistics service failure in series-connection structure of LSSC system is fully reflected in this SPN model.

An analysis of the shift of tokens and situations triggered consequently in Figure 5 leads to Markov process in LSSC, as is shown in Figure 6.

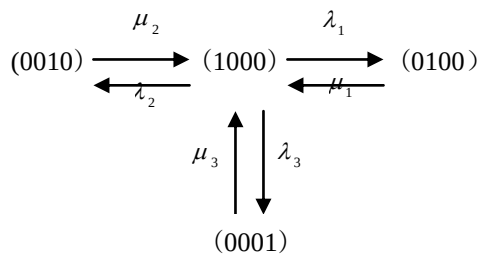

Figure 6. Transition Chain of Series Connection of LSSC based on Markov Process

The transferring probability matrix of the system:

$$A=\begin{bmatrix} -(\lambda_1+\lambda_2+\lambda_3) & \lambda_1 & \lambda_2 & \lambda_3 \\ \mu_1 & -\mu_1 & 0 & 0 \\ \mu_2 & 0 & -\mu_2 & 0 \\ \mu_3 & 0 & 0 & -\mu_3 \end{bmatrix}$$

Suppose $\prod_0$ as the probability of stability when running the system, and $\prod_i$ as the probability of system maintaining triggered by disabled service from suppliers at the specific node ***i,*** according to Markov theory, the following equations can be concluded.

$$\begin{cases} (\pi_0, \pi_1, \cdots, \pi_i)\, A = 0 \\ \pi_0 + \pi_1 + \cdots + \pi_i = 1 \end{cases} \qquad (1)$$

And from (1), we can get the steady-state availability of series based LSSC.

$$A_{series} = \pi_0 = \left(1 + \sum_{i=1}^{3} \lambda_i / \mu_i\right)^{-1} \qquad (2)$$

When the system runs from place p_0 to other places, the system turns from normal working status to failure status. Therefore, places $p_i(i=1,2,3)$ are the termination state of reliability. SPN nets model of reliability calculation is shown in Figure 7.

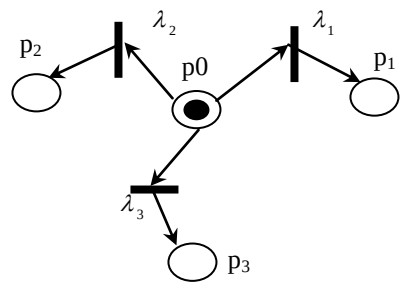

Figure 7. Stochastic Petri Nets Model when Calculation Reliability of Series-connection of LSSC

Considering combining statuses from reference [14], the reliability of LSSC whose structure is series-connection one is:

$$R_{series}(t) = p_0(t) = e^{-(\lambda_1+\lambda_2+\lambda_3)t} \qquad (3)$$

3.2 Analysis on the Reliability of Parallel-Series Connection

When logistics capability provided by different suppliers are the same, its LSSC reliability block diagram is parallel-series-connection structure, and its corresponding SPN model is as shown in Figure 8, in which place p_0 represents the normal working state, hence, at the starting point, the system works in a normal state, and place $p_i(i=1,2,5)$ represents logistics service failure state caused by 1 node enterprises, and $p_i(i=3,4,6,7)$ represents logistics service failure state caused by 2 nodes enterprises. The situation of logistics service failure in parallel-series-connection structure of LSSC system is fully reflected in this SPN model.

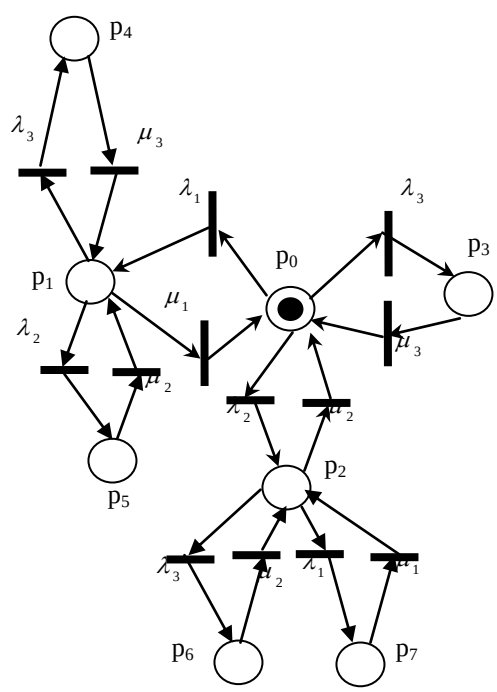

Figure 8. LSSC Reliability Model when Connection is Parallel-series based on Stochastic Petri Nets

 Copyright ⓒ 2014 SERSC

The transferring probability matrix of the system:

$$A=\begin{bmatrix} -(\lambda_1+\lambda_2+\lambda_3) & \lambda_1 & \lambda_2 & \lambda_3 & 0 & 0 & 0 & 0 \\ \mu_1 & -(\mu_1+\lambda_2+\lambda_3) & 0 & 0 & \lambda_2 & \lambda_3 & 0 & 0 \\ \mu_2 & 0 & -(\mu_2+\lambda_1+\lambda_3) & 0 & 0 & 0 & \lambda_1 & \lambda_3 \\ \mu_3 & 0 & 0 & -\mu_3 & 0 & 0 & 0 & 0 \\ 0 & \mu_2 & 0 & 0 & -\mu_2 & 0 & 0 & 0 \\ 0 & \mu_3 & 0 & 0 & 0 & -\mu_3 & 0 & 0 \\ 0 & 0 & \mu_1 & 0 & 0 & 0 & -\mu_1 & 0 \\ 0 & 0 & \mu_3 & 0 & 0 & 0 & 0 & -\mu_3 \end{bmatrix}$$

Likely, we can get the steady-state availability of LSSC in different status.

Under 0, 1, and 2, the system runs normally, and the system availability can be shown as (4):

$$A_{\mathbf{parallel-series}}=\pi_0+\pi_1+\pi_2=\frac{1}{1+\sum_{i=1}^{3}\frac{\lambda_i}{\mu_i}+\sum_{i=1,j=1,i\neq j}^{3}\frac{\lambda_i}{\mu_i}\cdot\frac{\lambda_j}{\mu_j}}\left(1+\frac{\lambda_1}{\mu_1}+\frac{\lambda_2}{\mu_2}\right) \quad (4)$$

When the system runs from p_0 to p_1、p_2, the system stays normal status. But when it turns to other places, the system will then turn into failure status. Therefore, places $p_i(i=3,4,5,6,7)$ are the termination state of reliability. The SPN nets model of reliability calculation is shown in Figure 9.

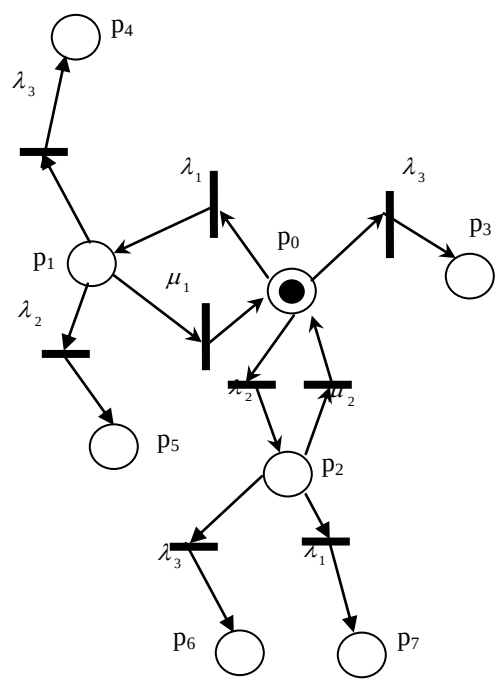

Figure 9. Stochastic Petri Nets Model when Calculation Reliability of Parallel-series-Connection of LSSC

Likewise, considering reference [14], we can get the reliability of LSSC whose structure is series-connection one:

$$R_{\text{parallel-series}}(t) = \exp(-(\frac{(\mu_1 + \mu_2)\lambda_1\lambda_2}{\lambda_1\mu_2 + \lambda_2\mu_1 + \mu_1\mu_2} + \lambda_3)t) \quad (5)$$

4. Example Analysis

Supposing that LSSC consists of three node corporations, as is shown in *Fig. 2*, when each logistics service is the same [15], the connection of logistics service supply chain is parallel-series, as is shown in *Fig 3*. And when the logistics service is different, the connection is series, supposing failure rate and repair rate as each node is $\lambda_1 = 0.021$, $\lambda_2 = 0.014$, $\lambda_3 = 0.011$, $\mu_1 = 0.78$, $\mu_2 = 0.84$, $\mu_3 = 0.93$.

4.1. Calculation and Analysis of the Steady-state Availability

From (2) and (4), the calculation of the steady-state availability of LSSC is: $A_{series} = 0.939$, $A_{parallel-series}$=0.979. From here we can easily see that when the failure rate is equal to the repair rate at each node, the steady-state availability is more effective with suppliers in competition rather than noncompetitive state.

Supposing repair rate remains the same, and failure rate rises 0.005 every time, the steady-state availability of the system can be shown as in Figure 10.

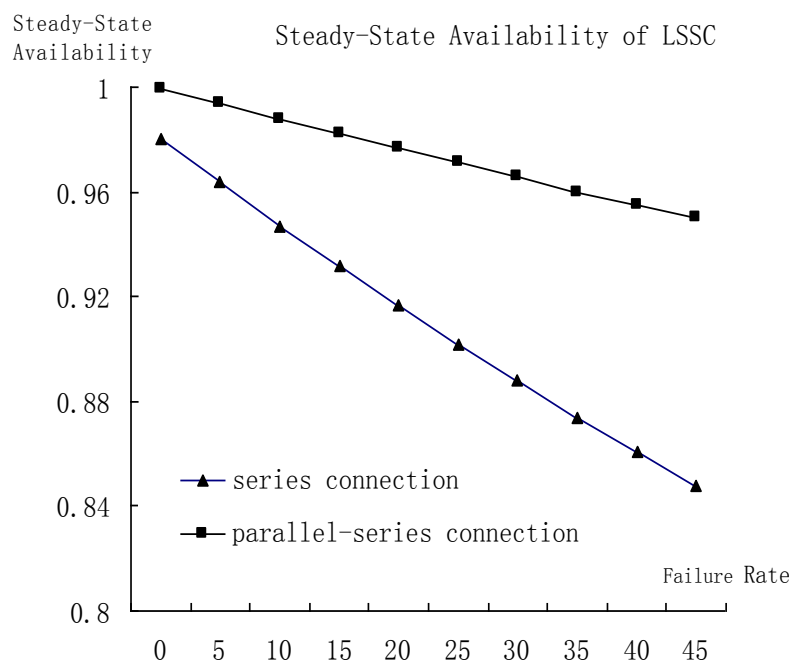

Figure 10. Steady State Availability of LSSC when μ_i is Stable, λ_i is Changing

From Figure 10, we can see that as failure rate rises, the steady-state availability of the system falls. But if the LSSC system is a parallel-series-connection structure, the fall of the steady-state of the system slows down, meaning that failure in the logistics service will be

 Copyright ⓒ 2014 SERSC

repaired sooner under higher competition; hence, the logistics service provided and its stability will be promoted.

4.2. Calculation and Analysis of Reliability

From (3) and (4), the reliability of LSSC is: $R_{series}(t) = e^{-0.046t}$, $R_{parallel-series}(t) = e^{-0.044129t}$. With Matlab tool, the reliability of LSSC can be shown in Figure 10.

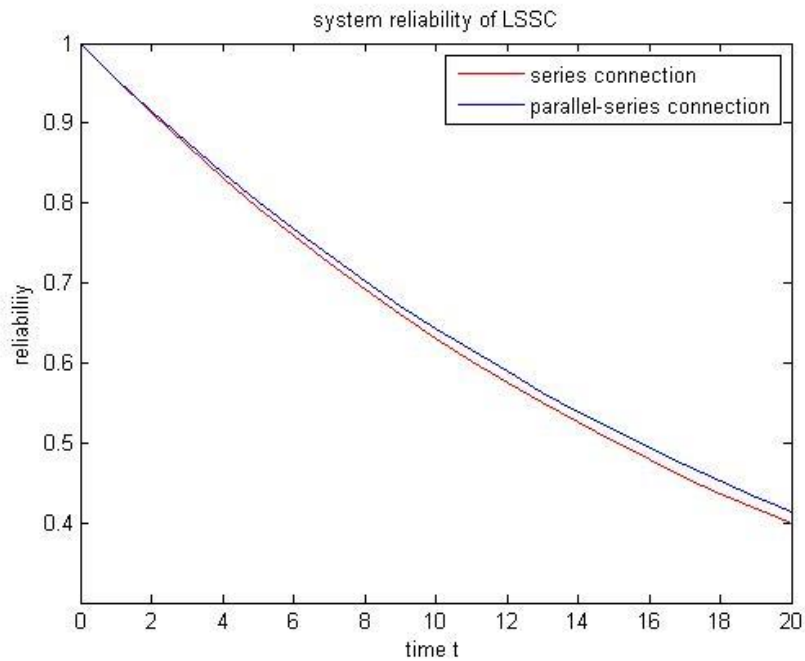

Figure 11. Reliability Curve of LSSC in Different Connection

As is shown in Figure 11, when logistics integrators choose the same supplier and the reliability of the service at every node is the same, failure in a stable LSSC will be lowered under competition, hence, providing a steadier and more reliable service. At the same time, we can see that the structure of the logistics service will be affected by the reliability of LSSC.

Acknowledgements

This paper analyses the logistics capability, sets up the two-echelon structure and the diagram of the reliability of LSSC. Based on Petri nets theory, logistics service failure, the transferring of the state of the system, the steady-state availability of the system, and its reliability index is analyzed in this paper. From calculation, we can reach the conclusion that LSSC provides costumers more efficient and more stable service under benign competition. The reliability characteristics of the three-echelon and multi-echelon structure of LSSC will be analyzed in further research, which will improve the decision support for the LSSC reliability management.

FUNDS

This research is supported by The Ministry of education of P. R. China, humanities and social sciences research Youth Project (12YJC630107) and the fundamental research funds for the Central Universities (13SQN04).

References

[1] W. Liu, "Research on the Coordination of Logistics Service Supply Chain", Shanghai Jiao Tong University. Shanghai, vol. 6, **(2007)**.
[2] D. J. Bowersox, D. J. Closs, Translated G. Lin, B. Song and M. Sha, "Logistical Management: The Integrated Supply Chain Process", Machine Press, **(2002).**
[3] F. F. Reichheld and W. E. Sasser, Jr., "Zero defections: quality comes to services", Harvard Business Review, vol. 9, no. 105, **(1990)**.
[4] Y. Li and M. Zhang, "Analysis on the transmission of unreliability of lLogistics service supply chain", Journal of Southwest University for Nationalities (Social Edition), vol. 9, no. 151, **(2012)**.
[5] Y. Jumei, "Modeling and functional analysis methods of reliability of complicated system based on Petri nets", Beijing: Defence Industry Press", **(2011)**.
[6] T. S. Liu and S. B. Chiou, "The Application of Petri nets to failure analysis", Reliability Engineering and System Safety, vol. 57, no. 129, **(1997)**.
[7] V. Kumar and K. K. Aggarwal, "Petri net for modeling and reliability evaluation of distributed processing systems", Reliability Engineering and System Safety, vol. 41, no. 167, **(1993)**.
[8] T. Zhang, X. Wu and Y. Tan, "The Application for the Analysis of the Reliability of Petri Nets", The Availability and Field Test for Electronic Devices, vol. 1, no. 60, **(2003)**.
[9] J. Sun, P. Wang and C. Yu, "Modeling and analysis on the Repairable system based on stochastic Petri nets", Journal of Tianjin University, vol. 3, no. 258, **(2004)**.
[10] X. Guo, S. Linyan and X. Sheng, "Research on the reliability of multi-echelon supply chain based on random colored Petri nets", Operation and Management, vol. 6, no. 66, **(2006)**.
[11] Z. Huixiang, L. Zhenggang and G. Chuanzhi, "The Reliability Model of the Operation of the City Transportation System Based on Petri Nets", Journal of Tongji University (Nature and Science Edition), vol. 3, no. 355, **(2006)**.
[12] D. Mu and Z. Du, "Research on the inherent reliability and the operational reliability of the supply chain", Logistics Technology, vol. 12, no. 37, **(2004)**.
[13] Y. Li and X. Zhang, "Analysis on the reliability of logistics service supply chain based on Markov process", Journal of Chongqing Jiaotong University, (Natural Science Edition), vol. 8, no. 895, **(2012)**.
[14] G. Yongji, "Reliability Engineering Theory", Beijing: Tsinghua University Press, Springer-Verlag Press, (**2002)**.

Authors

Yangzhen Li, She received her M.Sc. in Planning and Management of Traffic and Transportation (2004) and PhD student in Logistics Engineering of Southwest Jiaotong University, P. R. China. Now she is associate professor of logistics engineering at Logistics Management Department, Southwest University of Nationalities. Her current research interests include different aspects of Logistics Engineering and Supply Chain Management.

Haiyan Yi, She received her M.Sc. in Planning and Management of Traffic and Transportation (2004) and PhD in Logistics Engineering (2007) from Southwest Jiaotong University, P. R. China. Now she is an associate professor of logistics engineering at Logistics Engineering Department, Southwest Jiaotong University. Since 2009 she is a postgraduate tutor. Her current research interests include different aspects of Logistics Engineering and Supply Chain Management.

 Copyright ⓒ 2014 SERSC