International Journal of Sensor and Its Applications for Control Systems
Vol.5, No.1 (2017), pp.15-24
http://dx.doi.org/10.14257/ijsacs.2017.5.1.02

Animals Chew Monitoring System Design based on MSP430

Liu Ying-nan, Yi Shu-juan and Tao Gui-xiang

College of Information Technology, Heilongjiang Bayi Agricultural University, Daqing 163319, China
Dqpilyn@126.com

Abstract

In the domestic, many farms of livestock feed is often very optional. However, timing, quantitative hurl food for livestock, it is necessary. No scientific feeding, the result of not less than influence breeding breeding farm feeding, is a waste of feed production efficiency is low. This system is given priority to with MSP430 control chip control core device, combined with bending monitoring technology, temperature monitoring technology, data storage technology, data display technology and the clock logging, chew formed a complete set of monitoring system. By eating chewing for livestock brought about by the curvature change monitoring, obtain its chewing time, frequency and other parameters. At the same time to obtain the environment temperature and the acquisition time, and a variety of data integration, in text stored in the SD card system. After reading the SD card data, can get including time, temperature and chew clear text file. For the analysis of livestock eating habits provide strong technical support and data support.

Key words: *MSP430; Bending monitoring technology; SD card; Chew monitoring*

1. Introduction

The continuously in recent years has been accompanied by the development and application of emerging technologies, and single-chip computer rapid development over the years, in industrial control, single-chip microcomputer has a very wide range of applications, and application of SCM in animal husbandry, slightly a little bit slow. With the continuous development of science and technology, in modern times, single-chip computer is very widely used in animal husbandry [1]. Animal husbandry in our country the application of high-tech means are not enough developed. At present, according to the development of animal husbandry in our country, many farms of livestock feed is often very optional. However, timing, quantitative hurl food for livestock, it is essential, is also an important step in modern scientific breeding. Sensor is now mostly used at home and abroad mouths or large overall environmental equipment to monitor of livestock, this kind of way not installation difficulties, wear is the high cost. In terms of the present situation in our country, a convenient use, low cost, not easy to wear and tear, and can apply to most animals system is important and necessary. This design with the single chip processor as the core, it embodied in the modernization of agriculture animal husbandry, life behavior of livestock is simple but careful monitoring, thus learning livestock growth state of life. In the high-tech feeding livestock can play a certain help [2].

2. Cadence of Development Tools and IAR

This design using Cadence is a large EDA electronic circuit design software, with the help of it almost can complete all aspects of electronic design, including the design of ASIC, FPGA design and PCB design. IAR Systems as a worldwide are leading professional embedded system development tools, is also the main supplier of embedded services. IAR services provided by the company and the product involves all aspects of

ISSN: 2287-8467 IJSACS

the design of the embedded system, including from development to test every last detail. Including the us, which are frequently used with C/C + + compiler and debugger integrated development environment: "IDE", and all kinds of real-time operating system and middleware, the corresponding development suite, form a complete set of hardware simulators and state machine modeling tool [3].

3. System Composition Structure

This design is based on MSP430 single chip microcomputer as main control chip bending monitoring system, according to the real condition of the breeding of livestock farms, design the hardware block diagram of the system. Including chewing monitoring module, environment temperature monitoring module, data storage module, dynamic display of time record module and data module, the concrete block diagram as shown in Figure 1.

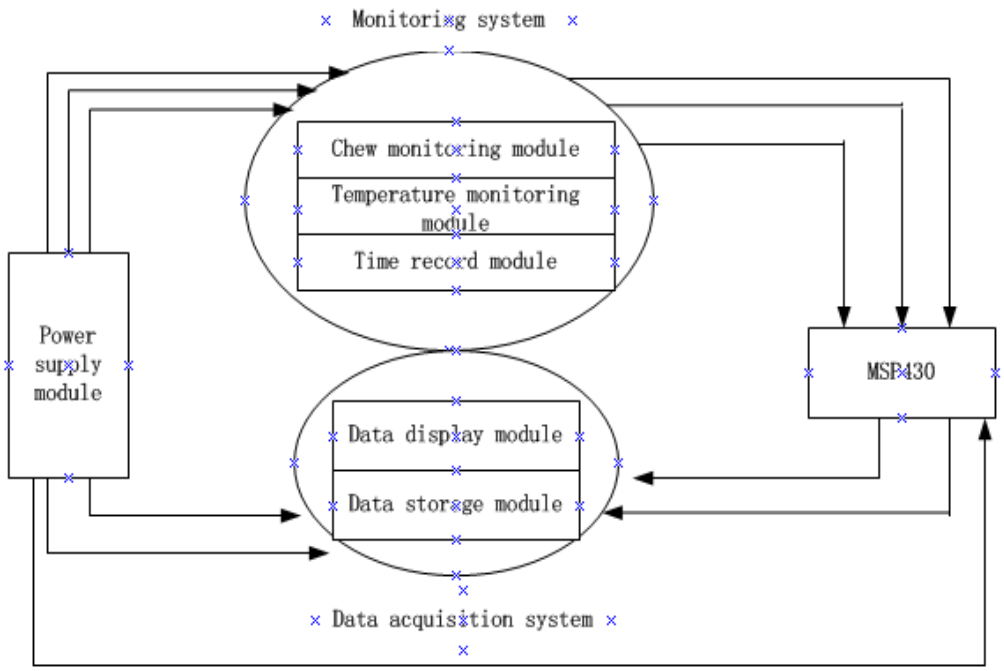

Figure 1. System Composition Structure

4. The System Hardware Design

4.1. Reset Circuit Design

MSP430 MCU usually adopt electric automatic reset and manual reset switch on one of two ways. This design adopts the electric reset circuit, electricity reset means, single chip microcomputer as long as one to electricity, will automatically enter the reset state. In the current moment, through the charging resistance R, capacitance C RST there have positive pulse, to reset operation.

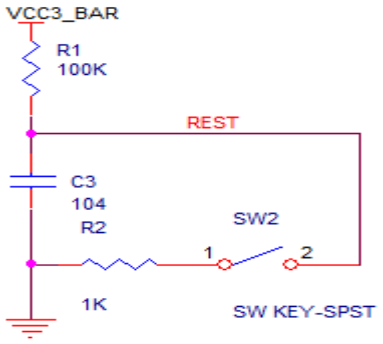

Figure 2. Reset Circuit

4.2. D/a Conversion Module

This design USES MSP430 - F149 microcontroller in the AD conversion, in principle is different from the general integral and successive more commonly used A/D conversion principle of 430 single chip microcomputer in the transformation, its input signal is directly on the A/D end capacitance on the network, then it will be on the basis of the capacitance charging to do sampling signal A/D conversion. The sequence can be summarized as shown in Figure 3:

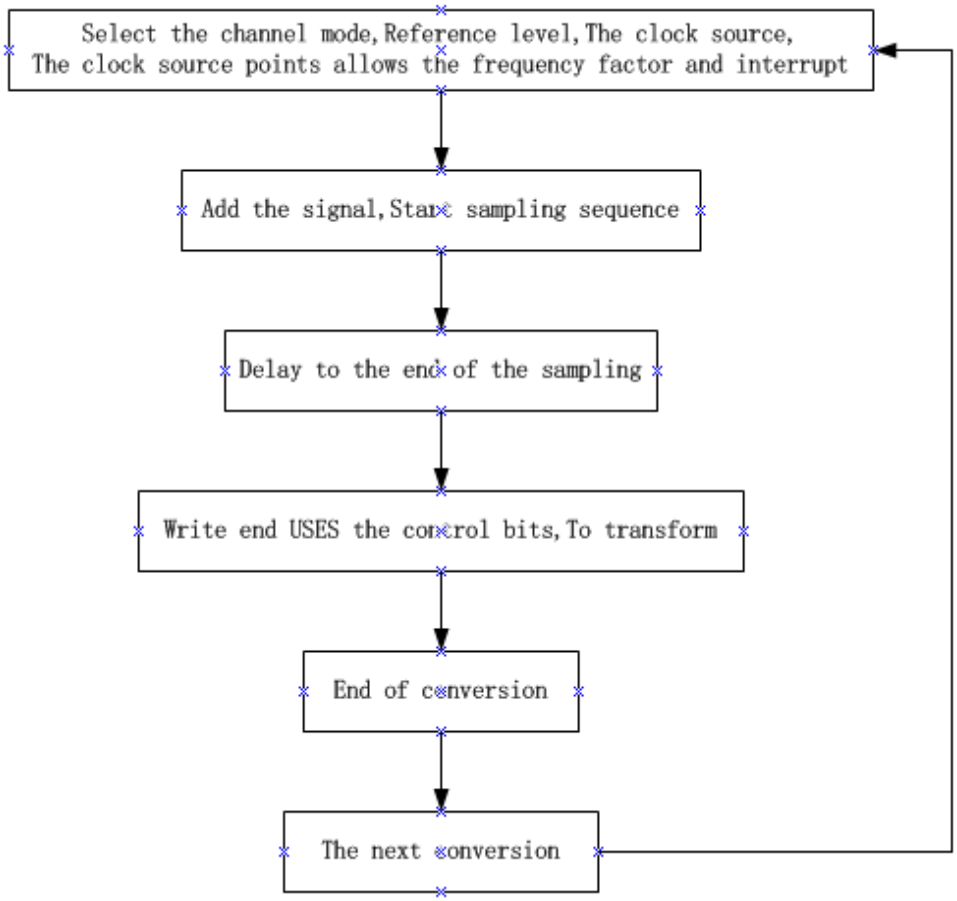

Figure 3. Flow Chart of Analog-to-Digital Conversion

4.3. Curvature Sensor Circuit

This design USES is the degree of curvature of a resistive sensors, sensor specific signal is RB - 02 s046, is an import simulative curvature sensor. Its total length is 80 mm, length measurement is 60 mm, working temperature can be between 0 to 55 degrees Celsius, the weight of 1 g, thickness of 0.43 mm, the average value of 10 k ohms, bending resistance range in 60 k to 110 k ohms, resistance and bending showed a positive correlation relationship.

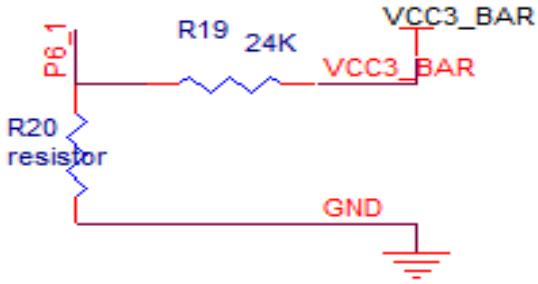

Figure 4. Partial Pressure Curvature Sensor Circuit Diagram

In the DS1302 clock chip, there are a lot of registers. As the calendar, time, register, a total of 12, here below 7 registers are used to store data from seconds to years, and store the data also has a specific format, format for BCD code. If we want to know it specific information, you can find it in the data sheet of the register. Its internal registers are shown in Figure 6 below time:

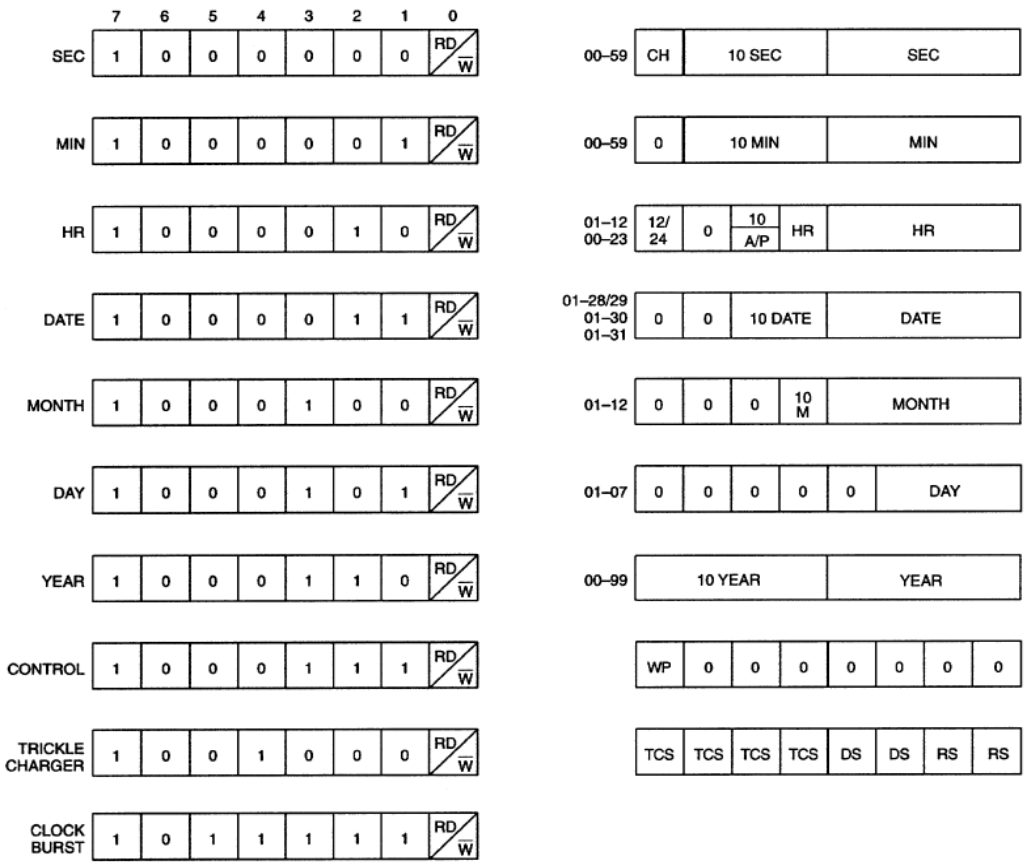

Figure 6. DS1302 Register Map

In terms of DS1302 clock chip, speaking, reading and writing, you can see from the top of the diagram, in addition to the VCC &gnd, DS1302 chip actually only three lines and single-chip computer connection, three lines were SCLK, I/O and RST (also written some CE), first look at the sequence diagram, as shown in Figure 7:

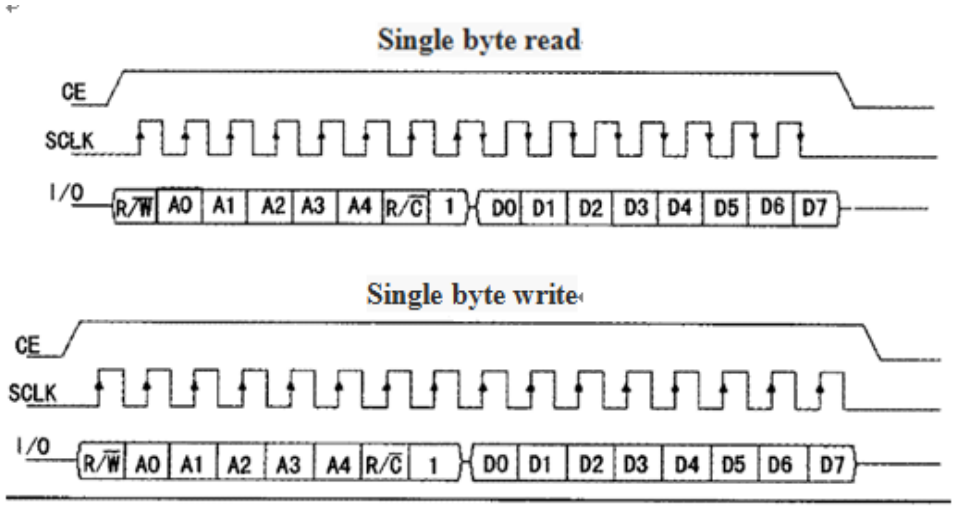

Figure 7. DS1302 Sequence Diagram

DS1302 clock chip data reading and writing, is wholly dependent on the I/O port of serial communication. Once every to read and write operations, also need to read and write at least 2 bytes of data, one of the first byte is to control the bytes, as well as a command, it will tell DS1302 clock chip is to read or to write, it is operated in RAM or CLOK register, and then the rest of a byte is DS1302 clock chip to read or write data[4]. Reading and writing data a total of seven. A 0 bit is to choose to read and write, when this bit is 1, and with DS1302 clock chip, said to be read operations, and then there are the real read operation, by the same token, when the bit is 0, is to write operation. Then in the figure 0-5, DS1302 clock chip register address is in this several for assignment. And then sixth is DS1302, what want to manipulate or CLK registers for the RAM operation, if this one is 0, that is to be on time to register to operate, usually this one basic it is assigned a 0, to register on time. The last of the 7th is fixed to 1. Reason is that what is said above, if want to undertake single byte read operation, so a bit at the end of the control word written seven (brother), clock chip has been put it register data on a 0 to IO on the mouth, but if the control word seventh is 0, the clock chip will not be able to put it the following data in IO on the mouth. This can be a problem, so the 7th is fixed to 1.

4.5. LCD1602 Display Module

This design adopts the LCD1602 display module, it is a commonly used LCD monitors. A word or string can through it to display, LCD1602 rated working voltage of 5 v, it has a total of 16 pin feet, foot 1 and 2 foot GND and VCC, the function is to adjust the brightness of 3 feet. 4 feet is RS register port choice, 5 feet WR signal port is, speaking, reading and writing, and the function of the six feet is to enable E end. Really pass data is 7 feet to 14 feet in it, and this is the LCD two-way data transmission port[5]. And then his feet BGVCC is display back light anode. The last 16 feet BGGND is back light of the negative. LCD1602 display module as shown in the figure below.

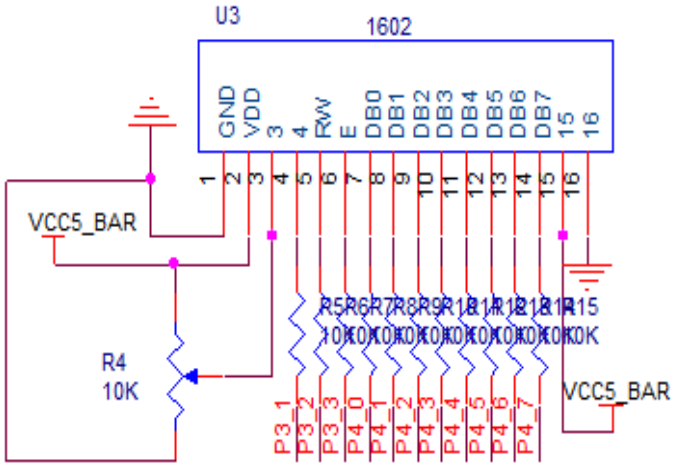

Figure 8. LCD1602 Circuit Diagram

4.6. DS18B20 Temperature Acquisition Circuit

DS18B20 digital thermometer can provide by the user to his own configuration 9 ~ 12 optional temperature readings to display the temperature information of the object to be tested. DS18B20 using a single interface to complete it all of the data transceiver, can be said to be half duplex mode of work, so, it and single chip microcomputer connection actually just need a cable that can achieve the purpose of the normal work. DS18B20 to read, write, and perform a temperature conversion parasitic power can be used as a way of power supply, which means you can use the data line itself to make their own power, it does not need external to its power supply. DS18B20 various encapsulation pin diagram as shown in Figure 9.

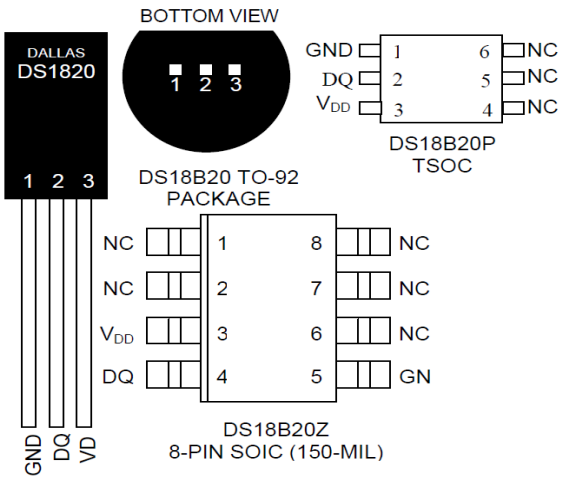

Figure 9. DS18B20 Various Encapsulation Pin Drawing

4.7. SD Card Communication Mode

D card in use process there are two types of selection of communication protocol: SD model and SPI mode. In the use of the SPI communication, will be divided into two ways, respectively is 3 line model and 4 line. The difference is that three line model for two-way, similar to half duplex mode of data transmission. While 4 line model for duplex

data transmission mode [6]. This may, according to the specific hardware resources and the need to choose. This design because only requires to write operation of SD card, so is the 3 line mode.

4.8. The Power Supply Module

Power supply module is mainly composed of the USB interface, light touch switch and a power supply chip AMS1117[7]. This design mainly need two power supply, respectively is used by the LCD1602 *etc*., 5 V power supply and the main chip MSP430, clock chip DS1302 USES 3.3 V power supply, etc. We adopt universal USB2.0 interface for the supply of the system. USB interface has a high convenience and affordable, very suitable for used as the power input end of the design. In order to give in the system of low power consumption 3.3 V component power supply, this design USES the AMS1117 5 V to 3.3 V power supply chip. AMS1117 is a common power supply series chips, it is widely used as a positive voltage low pressure drop, can do under 1 a 1.2 V voltage drop. The power supply circuit principle diagram is shown in Figure 10.

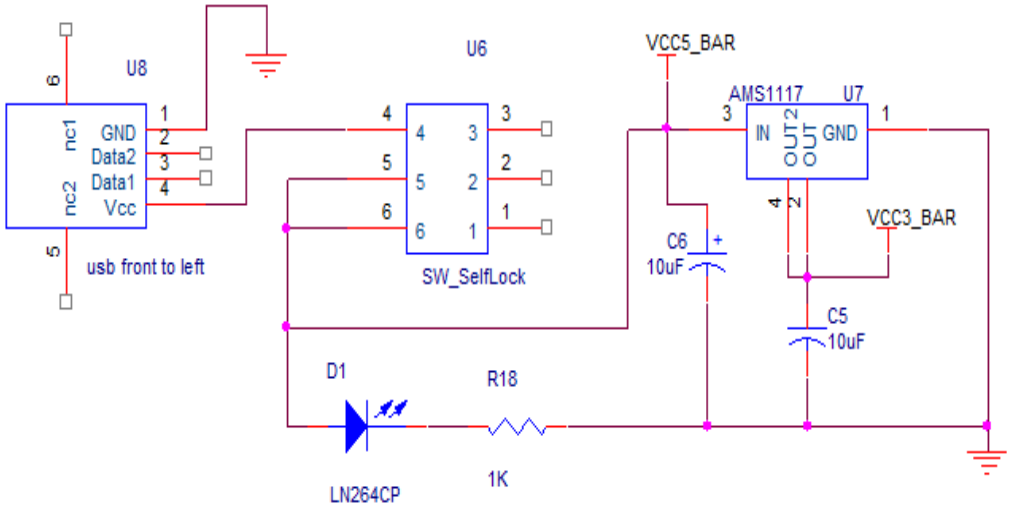

Figure 10. Power Module Circuit Diagram

5. The System Software Design

Single-chip microcomputer to collect various modules to send signals, including the temperature sensor will collect signal is converted to an array, bending to the collected signals, sensors will, DS1302 acquisition time information. And turn signals AD such as processing, and then after processing the information stored in the single chip microcomputer 430 SD card initialization, and stored in the form of TXT documents, if in the debug, and at the same time will dynamic data through lcd1602 display. Software flow chart is shown in Figure 11.

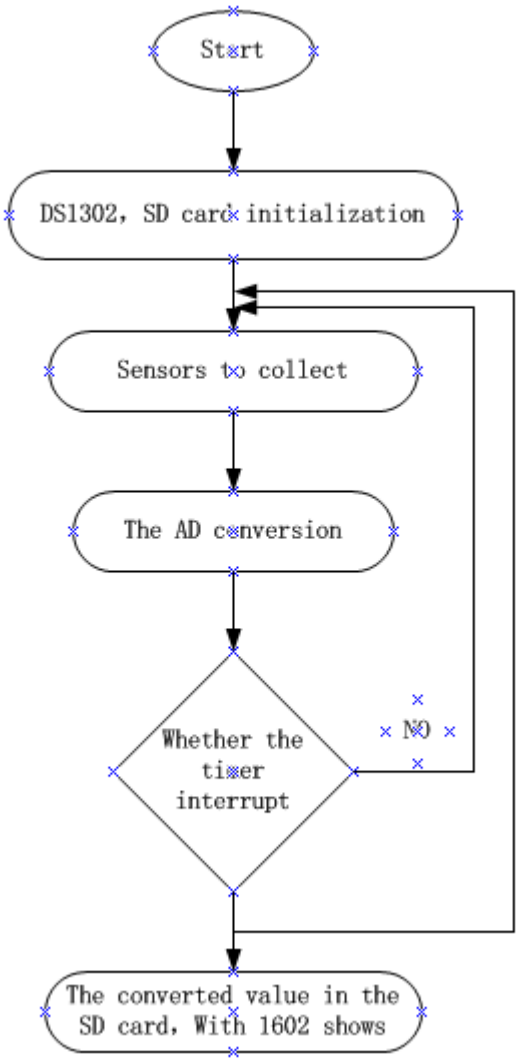

Figure 20. Program Flow Chart

6. The Conclusion

This project is given priority to with the low-power MSP430 control chip as control core, combines the bending degree of monitoring technology, temperature monitoring technology, data storage technology, data display and record clock function, formed by six modules of a complete and efficient system design. By chewing time for livestock, chewing cycle parameters, such as collection, for livestock to a certain time period detailed dietary laws, understand the domestic animals of all kinds of behavior, and then cooperate with analysis of the law, formulate detailed careful breeding scheme [8]. On the feed quantity and delivery time to achieve the target, finally achieve the purpose of efficient breeding, improve the level of animal husbandry science and technology at the same time, to accelerate the development of a national animal husbandry level.

Acknowledgments

1. State "thirteenth five-year" The national key research opportunity corpus (2016YFD0701801).
2. State "thirteenth five-year" Research and development of the national key program corpus (2016YFD0701801-03).

References

[1] J. Iwersen, "Statistical process control for autocorrelated processes: a case-study", Front. Stat. Qual. Contr., vol. 5, **(1997)**, pp. 138-155.
[2] T. J. M. Martins, M. B. Marques and O. Frazao, "Strain and curvature-independent temperature sensor based on an interferometer taper fabricated with a CO2 laser", Microwave and Optical Technology Letters, vol. 58, no. 3, **(2016)** March, pp. 688-691.
[3] D. V. Kazantsev and E. A. Kazantzeva, "A four-segment photodiode cantilever-bending sensor for an atomic-force microscope", Instruments and Experimental Techniques, vol. 57, no. 5, **(2014)** September, pp. 631-639.
[4] Y. Qi, L. Ma and J. Sun, "Highly sensitive bending sensor based on multimode–multimode–coreoffset fiber structure", In Optics and Laser Technology, vol. 75, **(2015)** December, pp. 52-56.
[5] S. Scott Courts, "A standardized diode cryogenic temperature sensor for aerospace applications", In 2015 Space Cryogenics Workshop, Phoenix, AZ Hosted by NASA Glenn Research Center, **(2015)** June 24-26.
[6] A. I. Pressman, K. Billings and T. Morey, "Switching Power Supply Design", Third Edition, New York; McGraw, Hill company, **(2009)**, pp. 671-672.
[7] K. M. Smedley and S. Cuk, "One-Cycle control of Switching Converrers", IEEE Transactions on Power Electronics, vol. 10, no. 6, **(1995)**, pp. 625.
[8] P. Wouters, M. De Cooman and R. Puers, "A multi-purpose CMOS sensor interface for low-power applications", **(1993)**, pp. 250-252.

Authors

Liu Ying-nan
Profile:
(1982-), Heilongjiang Province, Anda. Lecturer. Master.
Email:dqpilyn@126.com.Telphone:15845962618

Yi Shu-juan
Corresponding Author
(1965-), Shandong Province, Qixia. Professor. doctoral supervisor.