International Journal of Control and Automation
Vol. 9, No. 8 (2016), pp.181-194
http//dx.doi.org/10.14257/ijca.2016.9.8.18

Aircraft Landing Gear Embedded Buffer Controller Design Based On Magneto-Rheological Fluid

Li Fu[1*] ,Binbin Li[2] ,Wei Hu[3] ,Jianhui Xi[4] and Xinyu Chen[5]

[1]*Shenyang Aerospace University, Faculty of Aerospace Engineering, 110136 Shenyang, China*
[2]*Shenyang Aerospace University, School of Automation, Shenyang, China*
[3]*Shenyang Aerospace University, Faculty of Aerospace Engineering, Shenyang, China*
[4]*Shenyang Aerospace University, School of Automation, Shenyang, China*
[5]*Shenyang Aerospace University, School of Automation, Shenyang, China*
ffulli@163.com
670374736@qq.com

Abstract

Based on problem that the magneto rheological damper damping force of aircraft landing gear is not controllable in the process of aircraft's landing and taxiing. A method of embedded buffer controller of aircraft landing gear based on magneto rheological fluid is presented and the buffer control system is designed to control the magneto rheological damper damping force in my article, which mainly includes the selection of embedded digital signal processor（DSP）, the principle design of control system, and the design of power generation circuit modules, reset circuit modules, JTAG emulation circuit module, clock oscillator circuit module, A/D sampling correction module, D/A converter module, E2ROM circuit and the voltage controlled current source driver module. Through the simulation of circuit module, the current that is generated by voltage-controlled current source in the control system is acceptable to the MR damper, the magneto rheological buffer controller can control damping force and play a role in adjusting the aircraft landing gear.

Keywords*: aircraft landing gear; damping force; embedded; buffer controller; digital signal processor（DSP）*

1. Introduction

Aircraft will have a great load when it is on landing or taxiing on uneven runway in high speed. In order to avoid excessive load, the aircraft landing gear is generally equipped with buffer system. Most of aircraft landing gear use oil and gas type buffer, such as double cavity type, single air cavity type. We select the magneto rheological damper as the buffer device of the landing gear. Magneto rheological damper because of its excellent performance, rapid response and low energy consumption, large regulating range of damping, provides the possibility for the accomplishment of buffering device[1,2]. Magneto rheological damper is a damper with magneto rheological fluid as working medium, which makes use of the rheological properties of Magneto rheological fluid, it can control the size of damping force by changing the magnetic field strength around the magneto rheological fluid. The magneto rheological damper can effectively overcome the shortcomings of the oil and gas damper damping being not adjustable and effectively improve the buffer performance of the landing gear [3]. Carlson J D[4] has put forward a kind of suspension system of automobile magneto rheological damper that used for land transport; Gordaninejad F[5] has developed a multi-function and controllable and

ISSN: 2005-4297 IJCA

semi-active magneto rheological damper that used for high speeding automotive. Aiming at the application of magneto rheological damper in automobile suspension, the magneto rheological damper was applied to aircraft landing gear and was controlled by the DSP processor, the buffer based on magneto rheological damping in aircraft landing process has a smaller impact load and requires less stroke space [6]. In this paper, the magneto rheological fluid uses in aircraft landing gear and the magneto rheological buffer system is used as the buffer device of aircraft landing gear, this paper design a hardware circuit with the DSP as the core of the control system, the performance and feasibility of designed can meet the requirements [7]. In the process of aircraft landing, the relative displacement signal of airframe motion collected by the displacement sensor and the pressure signal collected by the pressure sensor are sent to the DSP controller, the corresponding control signal is transmitted to the magneto rheological damper after the information processed, then the signal can control the size of damping force.

Magneto rheological buffer structure of aircraft landing gear is shown in Figure 1.

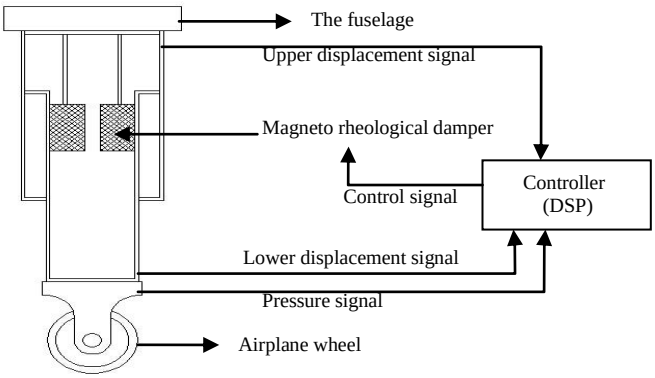

Figure 1. Aircraft Landing Gear Buffer Control System

2. Embedded DSP Processor Selection

Compared with the micro controller (MCU) and the microprocessor ARM, DSP processor has powerful data processing ability and high speed this two the most prominent feature, and also has programmable, real time operating speed per second that can reach tens of millions of complex instruction program, far more than the general microprocessor [8].

Aircraft landing gear control system uses a TMS320F2812 of TI company.TMS320F2812 has a powerful digital signal processing ability, perfect time management ability and the embedded control function, so it is widely used in industrial control, such as industrial automation and control, power application the only instrument, electronic technology, the motor servo control system.

Functional block diagram of the TMS320F2812 is shown in Figure 2.

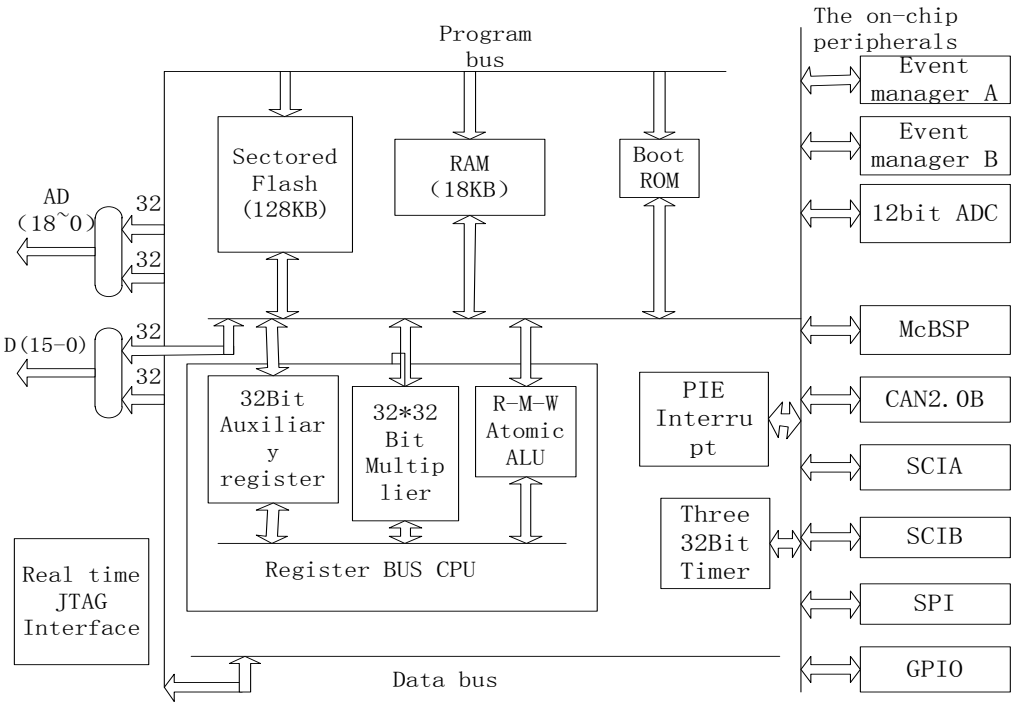

Figure 2. Functional Block Diagram of TMS320F2812

Before In the use of the DSP processor as the magneto rheological damper control system, the first step is make use of the data acquisition card to test the principle. As shown in Figure 3.

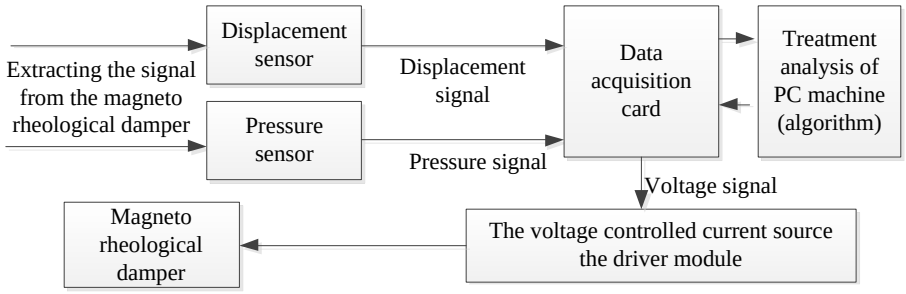

Figure 3. Block Diagram of the Experimental Test

The data acquisition card and PC machine in the test that is equivalent to a A/D converter and the D/A converter, the data acquisition card type is Advantech PCI-1712, because the machine is not only large volume, but also the processing speed and performance comparison of lag, the late work will use DSP embedded processor instead of data acquisition card. This experiment can not only test the displacement and pressure sensor whether is working properly, but also can test whether the whole design idea can be realized, and can test whether the design of voltage controlled current source circuit can be used.

3. The Block Diagram of the Airplane Landing Gear Embedded Buffer Control System Principle

Through the previous experimental results show that the design idea in line with actual requirements, then the embedded DSP processor used in aircraft landing magneto rheological damper control system, the principle of design is shown in Figure 4.

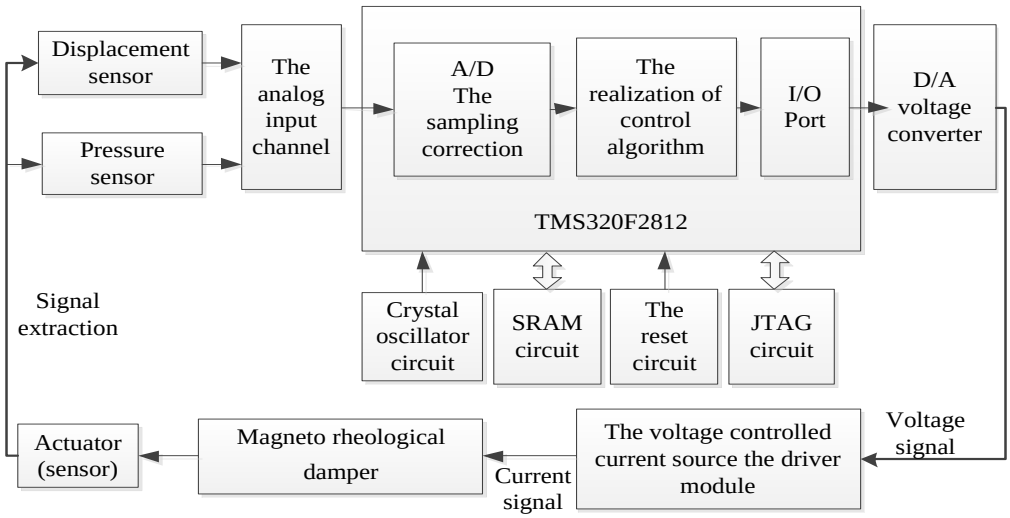

Figure 4. Aircraft Landing Gear Magneto Rheological Damper Embedded Control Block Diagram of the System

In principle the block diagram, embedded DSP processor used for TI, TMS320F2812, by the implementing agency (displacement sensor and signal sensor) will extract of magneto rheological damper displacement and pressure signals through the analog input channel to TMS320F2812 A/D converter sampling correction, then through the controller to realize the control algorithm , after signal processing in the TMS320F2812 convert a serious of digital signal, these digital signals through the TMS320F2812 port of the I/O transmit to the external device D/A converter and convert into a voltage signal, then the voltage signal from the D/A converter outputted to voltage controlled current source drive circuit, and by the end of the voltage controlled current source output current signal to the magneto rheological damper and to control the damping force of magneto rheological damper size. The JTAG circuit is used to download the program, simulation test, the reset circuit can be used to reset the control system, external expansion RAM circuit is cache data, crystal oscillator circuit is to protect the program and make the control program for the smooth operation of security.

4. Design of Aircraft Landing Gear Buffer Control Embedded System Hardware Circuit

4.1. Power Generation Circuit and Reset Circuit Module

The required voltage when the TMS320F2812 works is divided into two parts: the kernel 3.3V voltage Flash voltage and 1.8V. TMS320F2812 is very sensitive to power, so the use of this control system is the voltage high precision power supply chip SPX1117.Power generation circuit as shown in Figure 5.

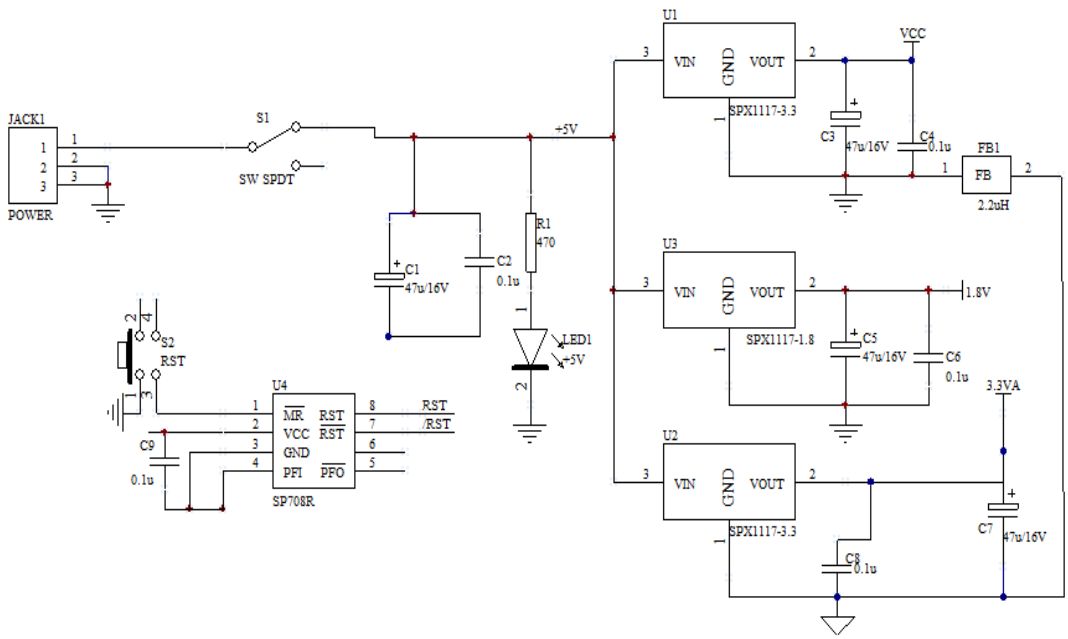

Figure 5. Power Generation Reset Circuit

The power supply JACK1 identified as positive inside and negative outside, the +5V voltage source of switch.SPX1117-3.3.Power conversion chip (U1) and high performance voltage stabilizing chip as 5V to 3.3V,VCC (3.3V)provides the main power supply is stable and reliable for the whole control system。SPX1117-3.3 power conversion chip (U2) provided by 3.3VA for using by the AD。SPX1117-1.8 power conversion chip (U3) provides 1.8V to the DSP kernel uses. After the SPX1117 output capacitance of 47uF cannot be omitted, so it better able to ensure power quality.

SPX1117 series LDO chip output current up to 800mA (note the suffix), the output voltage precision is within 1%, it also has the function of limiting and thermal protection current, and low prices, is widely used in handheld instrument, digital home appliances and industrial control field. When using it, the output is connected with a capacitor is usually 10uF or 47uF to improve the transient response and stability.

The use of specialized reset chip SP708R ensure reliable reset DSP chip, and provides a manual reset button to convenient debugging. The control system uses only the SP708R 7 feet (/RST) to reset DSP.

4.2. The JTAG Simulation of the Circuit Module

Considering the interference resistance of JTAG circuit, JTAG circuit module is connected with the DSP port all need to use pull design. Pulled the design in the signal design process will be uncertain of a resistor embedded in high level resistance simultaneously through limiting function. The JTAG circuit is shown in Figure 6.

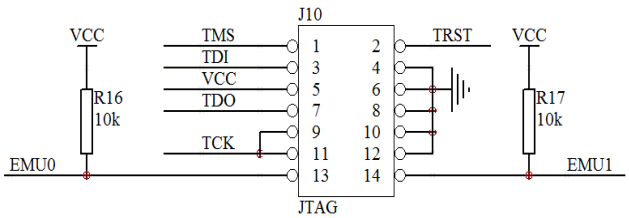

Figure 6. JTAG Circuit

4.3. The Clock Oscillating Circuit

Phase locked loop (PLL) is mainly used for kernel work frequency to control DSP, external provide a reference clock input, through the PLL frequency doubling or divider provided to the DSP kernel. The internal oscillator mode adopted by the system, the selection of the external crystal for the 30M circuit, the clock oscillating circuit is shown in Figure 7.

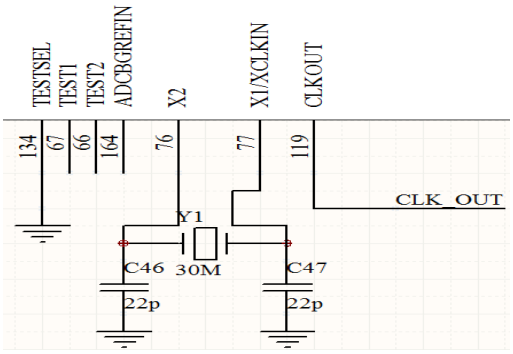

Figure 7. Clock Oscillation Circuit

4.4. A/D Sampling Correction Module

TMS320F2812 is equipped with 16 channels, analog to digital converter of 12 bit (ADC).A/D conversion circuit and an amplifying circuit is shown in Figure 8.

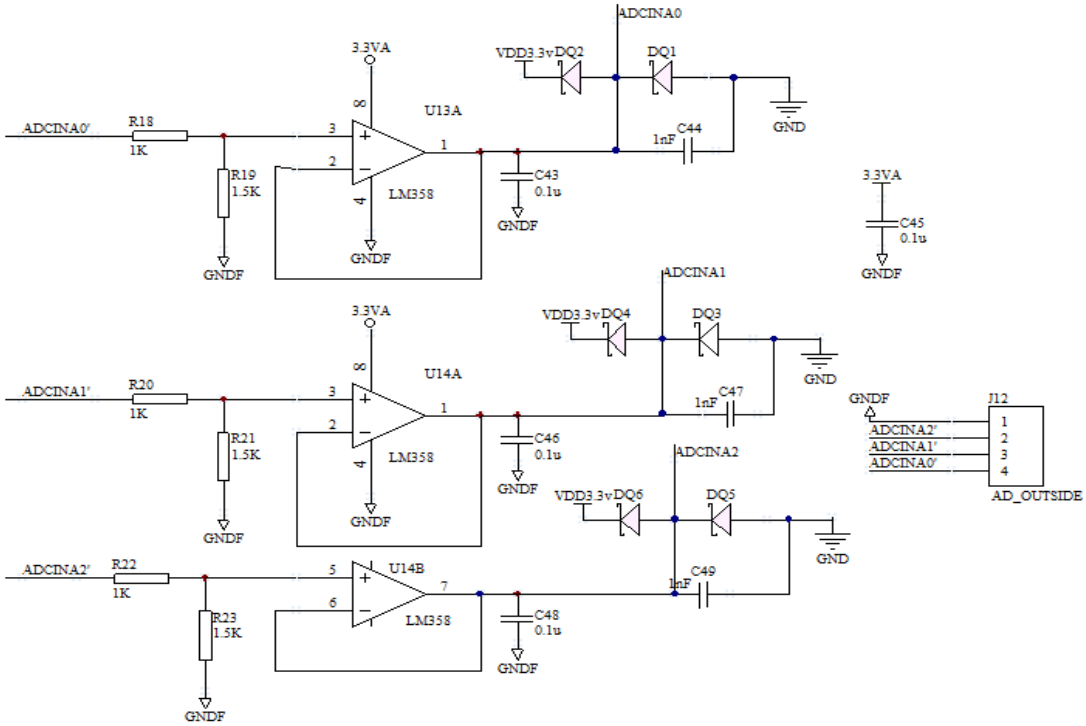

Figure 8. A/D Conversion Circuit, Amplifying Circuit and Clamp Circuit

In A/D sampling correction module, A/D conversion circuit and LM358 chip composed of amplifying circuit, the displacement sensor and the pressure sensor output voltage is between 0~5V, displacement signal, displacement signal, pressure signal through ADCINA1 ', ADCINA2', ADCINA3 'pins leads to LM358 Op Amp Voltage

condition, in order to ensure the voltage range of analog signal in TMS320F2812 acceptable, and prevent external interference, this module is also designed clamp protection circuit, to ensure that the TMS320F2812 chip is between 0~3.3V to the input signal, as shown in Figure DQ1, DQ2 two diode, when after the voltage signal of LM358 amplification circuit output slightly higher than that of 3.3V when DQ2 diode is turned on, the input port voltage of 3.3V is to A/D. Similarly, when after the voltage signal of LM358 amplification circuit output slightly less than 3.3V when DQ1 diode is turned on, the input port voltage of 0V is to A/D. The ADC port input voltage is maintained within it by two diodes, make it work.

4.5. D/A Conversion Module

The sensor extract the analog signal by the A/D converts into a digital signal, in order to real-time control system to produce the current signal, so converted into analog signals after the digital signal must be analyzed after, this can be achieved by the SPI D/A converter. The SPI is a high-speed synchronous serial input / output, often referred to as a serial peripheral interface, transmission rate and the length of transmission of SPI data are programmable. SPI achieve D/A conversion function and select the converter which D/A converter for the TLC5620 of TI ,serial 4 Channel 8 bit D/A converter.TMS320F2812 are connected through the SPI port and TLC5620. The D/A converter circuit is shown in Figure 9.

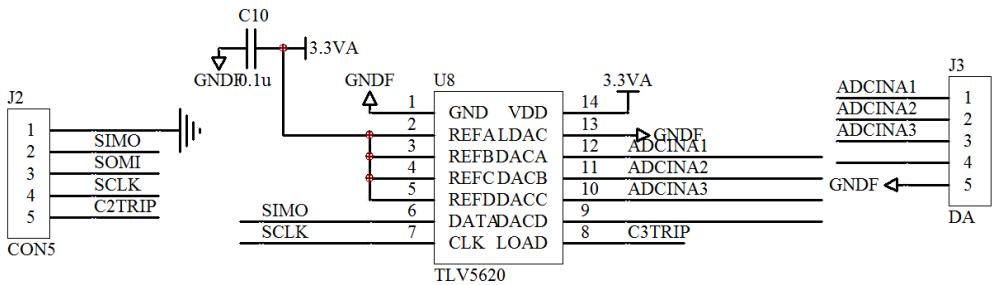

Figure 9. D/A Converter Circuit Diagram

Four D/A signals of D/A converter in the control system are treated with output voltage follower, due to the requirements of the control signal of TLC5620 VIH (high level input) is higher [9], so it is necessary to improve CS signal output by the DSP SPICLK, SPISIMO and I/O mouth simulation. The control system outputs one digital signal from the TMS320F2812, through the SPI module data transmission is completed in 40, 34, 46 pin, TLC5620 and TMS320F2812 interface circuit is shown in 10.

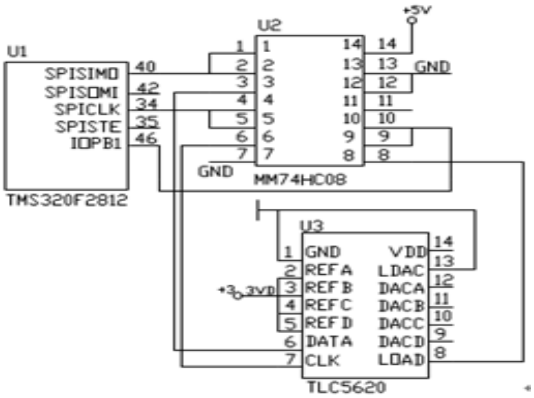

Figure 10. TLC5620 Interface Circuit with TMS320F2812

As the working frequency of TLC5620 is 1MHz, used in the expansion of the plate is 74HC08 and gate circuit, so SPI communication frequency must also be set to 1MHz. After the processed output analog signal ,it can be extracted by any one pin of the TLC5620 DACA, DACB, DACC, DACD.

4.6. External Expansion E^2ROM Circuit Module

TMS320F2812 has 18K*16 bits in RAM space. When the code length is greater than 18K*16, the RAM space of DSP chip is not enough, then it can be solved by the method of ROM expansion,TMS320F2812 has 19 address lines and 16 data lines, expansion E^2ROM of this system is used for AT24C64 chip, expand ROM storage capacity of this chip for 8K*8 bits. The TMS320F2812 and extended E^2ROM interface diagram is shown in Figure 11：

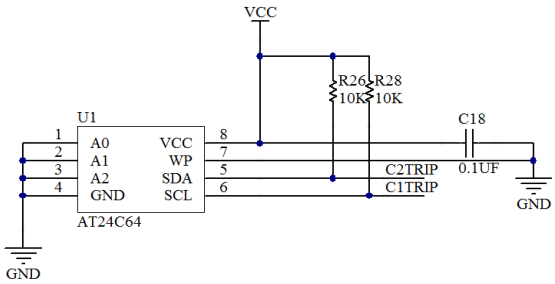

Figure 11. External Expansion E2ROM Circuit

This circuit is based on AT24C64 chip and DSP to complete the data read and write, the clock and data lines are directly from DSP C1TRIP and C2TRIP above. We also use DSP C1TRIP and C2TRIP as the IO to use.

4.7. Voltage Controlled Current Source Drive Module

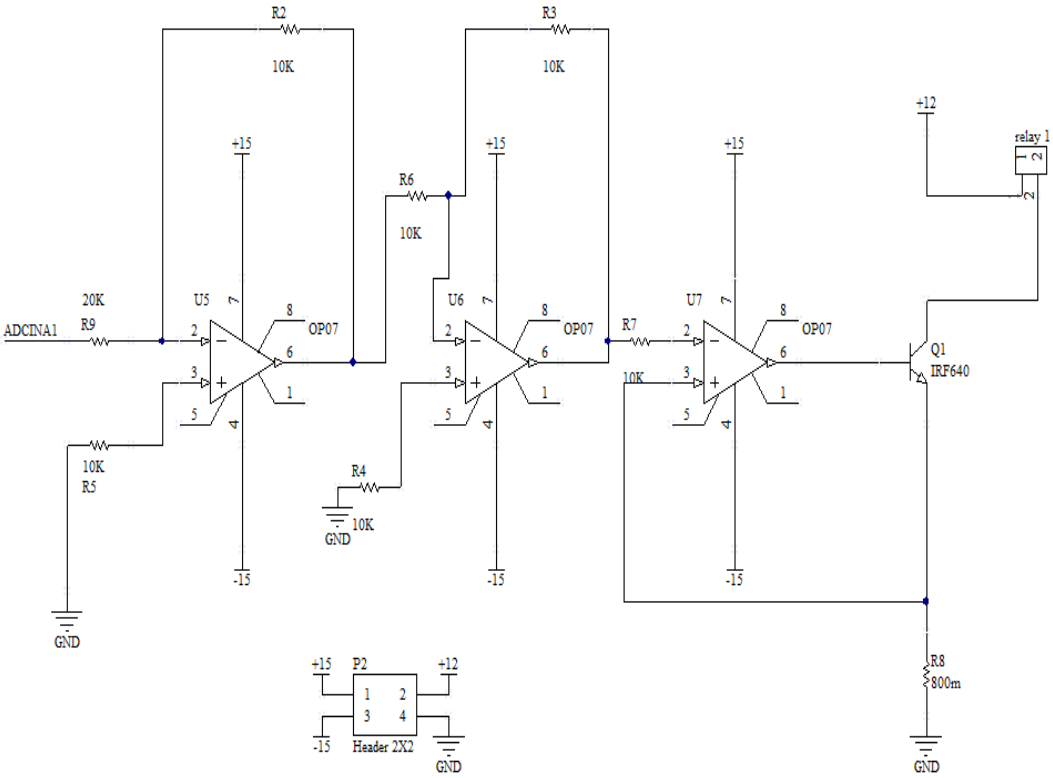

Figure 12. Voltage-Controlled Current Source Driver Module

Driving circuit uses three operational amplifier type OP07CP and field effect tube uses type IRF640, V1 is variable voltage, R8 is the sampling resistor, the resistor is variable. In the Figure, 0P07 operational amplifier uses a dual power supply, P2 power supply it, where +12V is the power field effect transistor IRF640. Because the maximum output voltage of D/A chip TLV5620 is 3.2V, so the voltage is adjustable and voltage range is 0-3.2V, obtained by the D/A converter output voltage. A voltage obtained by the first operational amplifier and a second operational amplifier is U2, the input voltage is 3.2V that the maximum voltage, they can obtain the equation: 20KΩ/10KΩ=3.2V/U2, so U2=1.6V, Id=U2/R8=1.6V/0.8Ω=2A.When the input voltage is between 0 and 3.2 V, the leakage pole of field effect transistor produces current that between 0 and 2 A, this current give to the magneto rheological damper and control the size of magneto rheological damper damping force. In figure, Relay1 is the connection terminals of magneto rheological damper.

5. The Simulation of Control Circuit Module

Voltage-controlled current source driver circuit uses Multisim simulation whose results are shown in Figure 13, where in the simulation software the voltage V1 is the D / A output voltage, output voltage D/A and the output current voltage controlled current source drive circuit is obtained after processing is a linear relation, in Figure 14. In Figure 13(a) ,D/A output voltage is 3.2V, output voltage operational amplifier U2 is 1.6V (voltage XMM2 display), current output from the field effect tube is 2A (current XMM1 display). In Figure 13(b) ,D/A output voltage is 2V, output voltage operational amplifier U2 is 1V (voltage XMM2 display), current output from the field effect tube is 1.25A (current XMM1 display), current field effect tube out is the input currents of magneto rheological damper, this current is the maximum current for the control of magneto rheological damper.

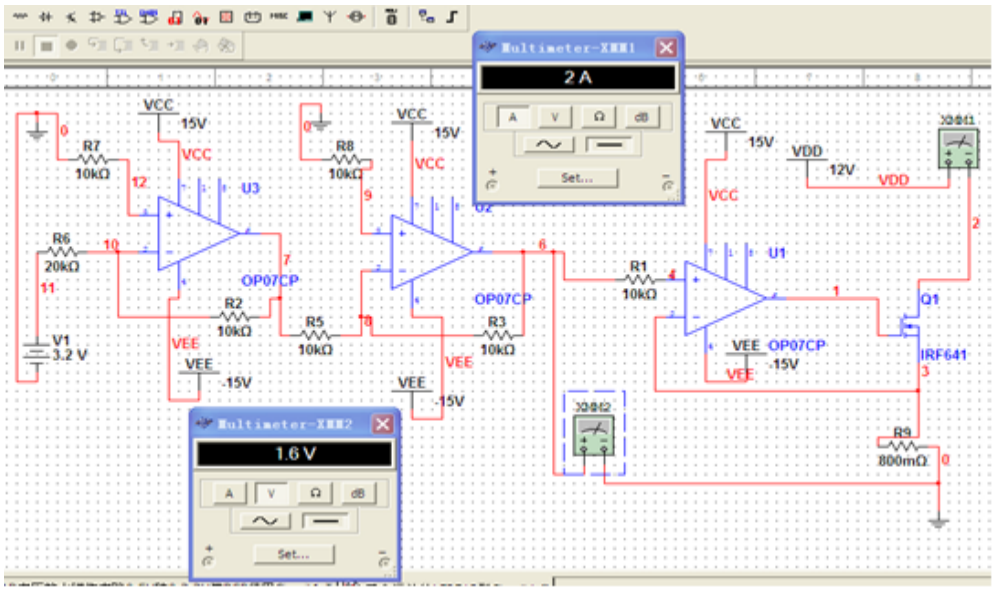

Figure 13(a). Voltage-Controlled Current Source Driver Circuit Simulation Chart

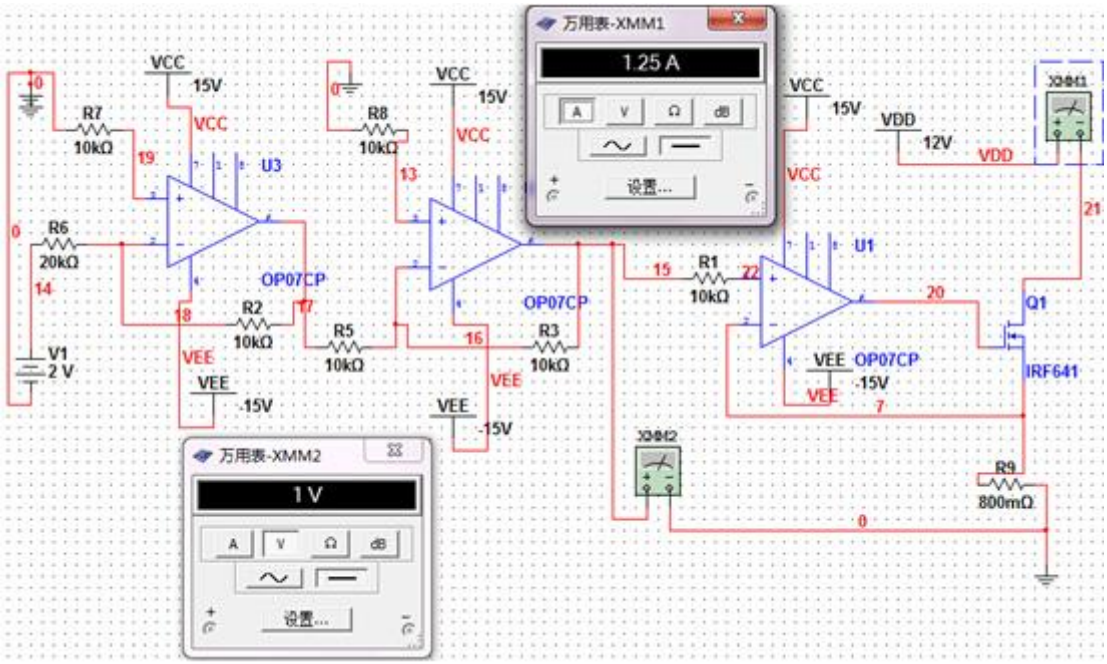

Figure 13(b). Voltage-Controlled Current Source Driver Circuit Simulation Chart

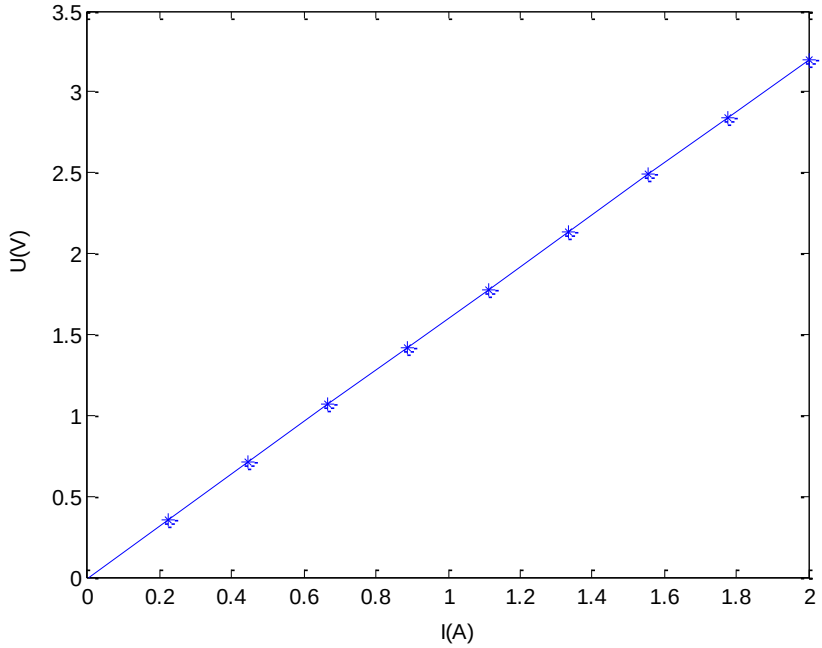

Figure 14. Linear Relationship between Input Voltage and Output Current of Voltage Controlled Current Source Driving Circuit Chart

A/D signal sampling circuit simulation diagram as shown in Figure 15. In Figure 15(a),A/D sampling voltage is 3.003V (voltage XMM1 display), In Figure 15(b),A/D sampling voltage is 1.803V (voltage XMM1 display). Because the sensor input voltage range by using the control system is in the 0-5V and the maximum voltage TMS320F2812 can stand is 3.3V, in the sensor signal acquisition input to the voltage signal in TMS320F2812 must be through the signal conditioning within the voltage range

so that the input signal can bear in the DSP, and that the signal sampling circuit can be controlled within range that the DSP can stand, it also allows the processing of the signal to be linear with the signal before processing, in Figure 16.

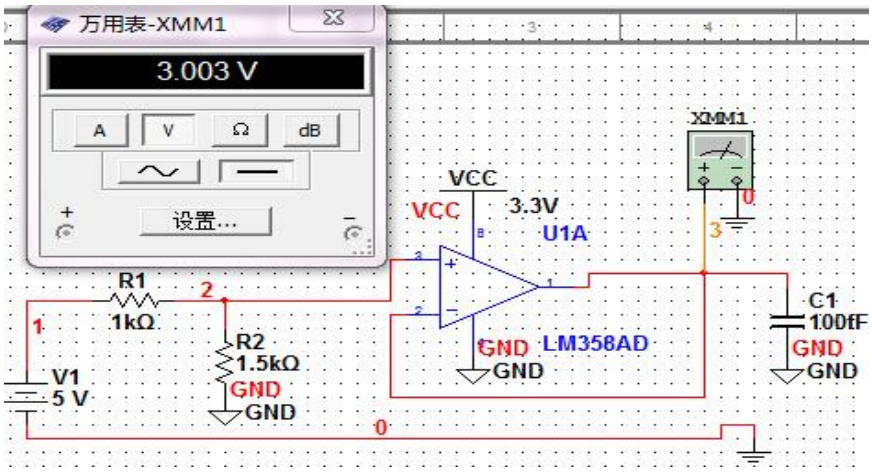

Figure 15(b). A/ D Sampling Circuit Simulation Chart

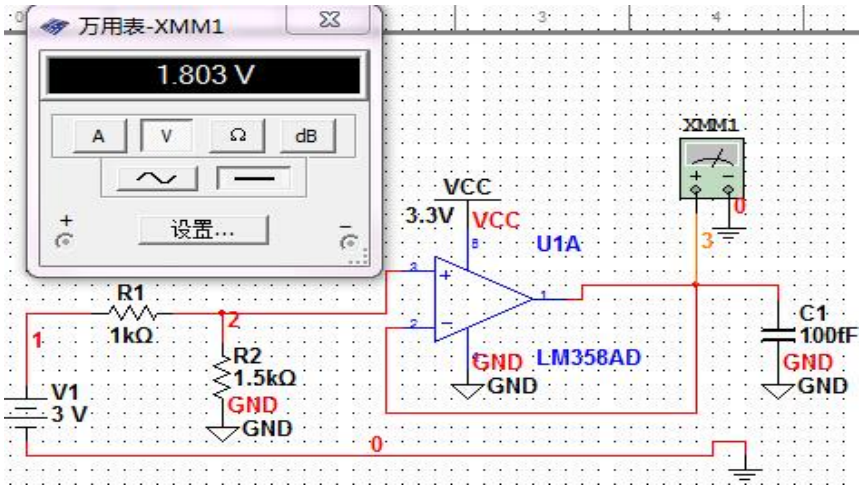

Figure 15(b). A/ D Sampling Circuit Simulation Chart

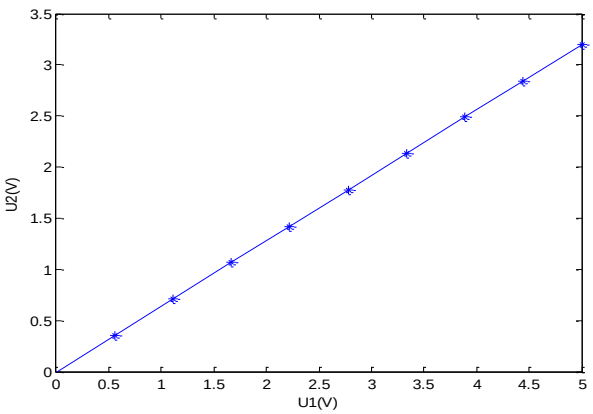

Figure 16. A/D Signal Conditioning Circuit Before and After Voltage Linear Relation Chart

6. Conclusion

An embedded control system of aircraft landing gear based on the magneto rheological damper is designed in the article , which uses the 32 bit fixed-point DSP processor(F2812) made in TI company as the control core, it combines the advantages of high performance, multi-function, high performance to price ratio, and the magneto rheological technology is applied to the landing gear buffer. Also, we propose the buffer control scheme that for a certain type of aircraft landing gear control system and design the peripheral expansion circuit etc. Through the simulation of the module circuit, the magneto rheological buffer controller designed can control damping force and play a regulatory role in the aircraft landing gear, the design achieves the desired effect.

Acknowledgements

This research is partially supported by the National Natural Science Foundation of China (No. 61074090), the Innovation Funds of Aviation Industry Corporation of China (No. cxy2013SH16), the Natural Science Foundation of Liaoning（United Foundation）(No. 2015020061), and the Natural Science Foundation of Liaoning （ United Foundation）No. 2015020069)

References

[1] G.Yang and Spencer, “Large-scale MR Fluids Dampers: Modeling and Dynamic Performance Consideration”, Engineering Structures, **(2004)**.
[2] G. Pan, Mhiroshi and H. Yoshihisa, “Analytical model of a magneto rheological damper and its application to the vibration control”, Proceedings of System Integrity and Maintenance, Kyoto, **(2000)**, pp.1850-1855.
[3] Z. Jiang, “Lightweight landing gear design and magneto rheological damping characteristics of the shock absorbers research”, Harbin Institute of Technology, **(2012)**.
[4] J. D. Carlson, “Commercial magneto—rheological fluid devices”, Proceeding of the 5th international Conference on ER Fluids, MR Suspensions and Associated Technology, **(1995)**, pp.20-28.
[5] F. Gordaninejad and S. P. Kelso, “Magnet—rheological fluid shock absorbers for HMMWV”, Proceedings of SPIE, **(2000)**, pp.266—273, 506.
[6] D. C. Batterbee, N. D. Sim and R. Stanway, “Magneto rheological landing gear: I.a design methodology”, Smart Materials and Structures, vol.16, no.6, **(2007)**, pp.2429-2440.
[7] C. Saban, Z. Erkan, S. Selim and Y. Ismail, “A new semiactive nonlinear adaptive controller for structures using MR damper: Design and experimental validation. Faculty of Mechanical Engineering”, Yildiz Technical University, Istanbul, Turkey, Original Paper, vol.43, no.4, **(2011)**, pp.22-30.
[8] U. Meyer-Baese, “Digital Signal Processing with Field Programmable Gate Array”, Springer, vol.33, no.88, **(2001)**, pp.53-59
[9] H. Kang, D. Chen and L. Zhang, “Analog Electronic Technology Foundation (fifth edition), Beijing: Higher Education Press, **(2008)**.

Authors

Li Fu*, She is a professor and PhD. She was born on September 27,1968 in Liaoning Province, China. Her major is Control Science and Engineering, E-mail:ffulli@163.com.

Binbin Lib, He was a Post graduate student major in Control Enginnering. He was born on January 2nd, 1991. E-mail:670374736@qq.com