International Journal of Control and Automation
Vol.7, No.7 (2014), pp.461-476
http://dx.doi.org/10.14257/ijca.2014.7.7.38

The Optimal Sliding Mode Controller Design of Buck Converter using Artificial Intelligence Techniques

Satit Chonsatidjamroen, Kongpan Areerak and Kongpol Areerak

School of Electrical Engineering, Institute of Engineering
Suranaree University of Technology, Nakhon Ratchasima 30000, Thailand
kongpan@sut.ac.th

Abstract

This paper presents the design of a sliding mode control of a buck converter using the artificial intelligence techniques. According to the advantages of the averaging model derived from the generalized state-space averaging method, it was used as the objective function for the searching process. The results from the simulation and the experiment show that the controllers designed from the proposed method can provide the best output response compared with those designed from the conventional method. The co-operation between the artificial intelligence algorithm and the averaging model is suitable to design the controller of power converters with a good performance.

Keywords: *Sliding mode control, Modelling, Simulation, Generalized state-space averaging, Adaptive tabu search, Particla swarm optimization, Artificial intelligence*

1. Introduction

The artificial intelligence (AI) techniques have widely been applied to many works of engineering such as the system identification using an adaptive tabu search (ATS) [1-5], the protection design of the relay via the ATS [6], the active power filter design using a genetic algorithm (GA) [7], power loss minimization using a particle swarm optimization (PSO) and an artificial bee colony (ABC) [8], reactive power optimization for distribution systems based on an ant colony optimization (ACO) [9]. From the literature reviews, the ATS algorithm has the mathematical proof to confirm that the algorithm can escape the local solutions [3]. For the PSO algorithm, it is very simple compared with other AI-based heuristic optimization techniques. Hence, in the paper, the ATS and PSO algorithms are selected to design the sliding mode controller of the buck converter.

Unfortunately, The AI method has not been widely applied to power electronic systems. This is because the simulation of power electronic systems via the software packages consumes a huge computational time due to their switching actions. Several approaches are commonly used for eliminating the switching actions of power converters. In the paper, the generalized state-space averaging (GSSA) method [10-12] is selected to model the buck converter with the sliding mode control. Therefore, this paper presents the application of the averaging model of power converters to the optimal sliding mode controller design in which the faster simulation time is achieved. The reported averaging model is used as the objective function for the AI searching processes. The parameters of the controller are appeared in the resulting dynamic model that can perfectly explain the behavior of the whole system. The results from the simulation of the exact topology model and the experiment confirm that the best output response of the buck converter can be obtained from the system having the

ISSN: 2005-4297 IJCA

controller designed from the proposed techniques. A good co-operation between the AI methods and the proposed averaging model will be shown in the paper.

The paper is structured as follows. In Section 2, considered power system with deriving the dynamic model using the GSSA method is firstly explained in which this model is used as the objective function for the AI searching methods. In addition, the comparison results between the reported averaging model and the full switching model of the software package in terms of accuracy and computational time are also illustrated in Section 2 to ensure that the proposed model can explain the dynamic behavior of the whole system with the fast simulation time. In Section 3, the sliding mode controller designs using the ATS and PSO methods are addressed. The simulation results are fully given in Section 4. Moreover, the experimental results are also shown in Section 5 to support the simulation results. Finally, Section 6 concludes and discusses the advantages of the proposed technique for the optimal controller design of the power electronic systems.

2. Considered System and Dynamic Model

The studied power system is depicted in Figure 1. It consists of a DC voltage source, a buck converter feeding a resistive load, and the sliding mode controller (SMC) to regulate the output voltage equal to V_{ref}. The buck converter is assumed to operate under the continuous conduction mode (CCM). The schematic of the SMC is shown in Figure 2. It can be seen that the SMC parameters are represented by *a*, *b*, *m*, and *K*.

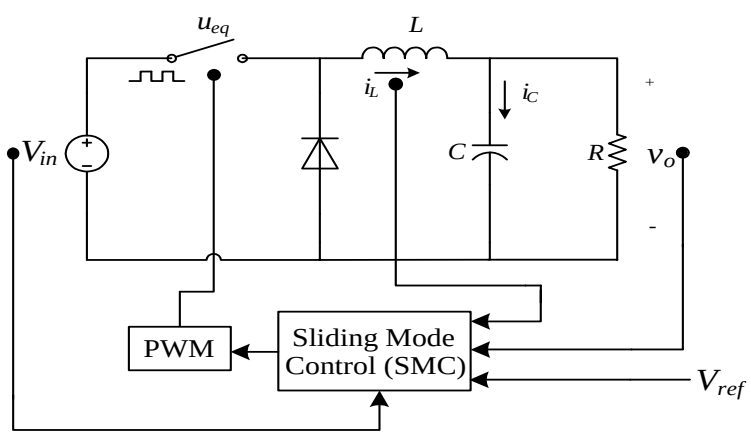

Figure 1. The Considered Power System with SMC

The GSSA method is used to eliminate the switching action of a buck converter. After deriving the model via the GSSA method, the system dynamic model can be written as given in (1).

$$\begin{cases} \dot{\mathbf{x}} = \mathbf{Ax} + \mathbf{Bu} \\ \mathbf{y} = \mathbf{Cx} + \mathbf{Du} \end{cases} \tag{1}$$

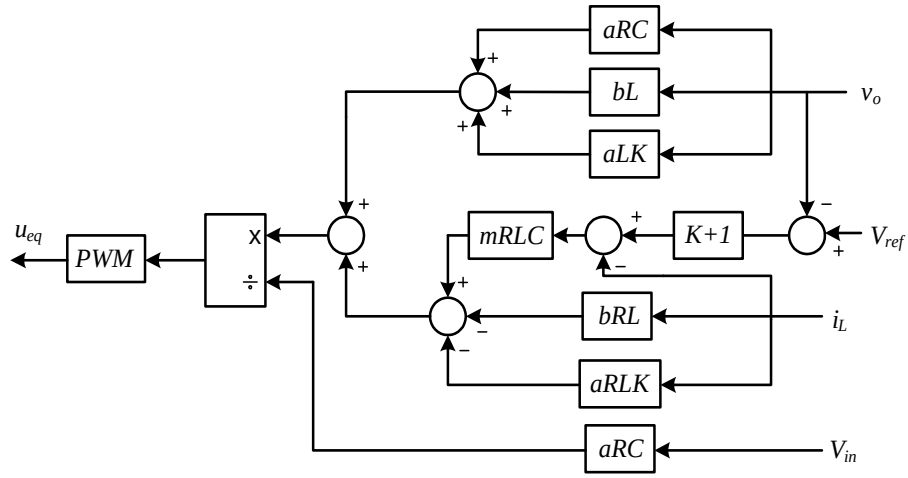

Figure 2. The Schematic of SMC

where

state variables: $\mathbf{x} = [i_L \;\; v_o]^T$

input: $[V_{ref}]$

output: $\mathbf{y} = [i_L \;\; v_o]^T$

The details of **A**, **B**, **C**, and **D** in (1) are given in (2).

$$\begin{cases} \mathbf{A} = \begin{bmatrix} -\left(\dfrac{b + aK + mC}{aC}\right) & \dfrac{b + aK - mRC\,(K+1)}{aRC} \\ \dfrac{1}{C} & -\dfrac{1}{RC} \end{bmatrix} \\ \mathbf{B} = \begin{bmatrix} \dfrac{m(K+1)}{a} \\ 0 \end{bmatrix} \\ \mathbf{C} = \begin{bmatrix} 1 & 0 \\ 0 & 1 \end{bmatrix} \\ \mathbf{D} = \begin{bmatrix} 0 \\ 0 \end{bmatrix} \end{cases} \tag{2}$$

In (1) with the details in (2), the SMC parameters, *a b m* and *K*, are appeared in the reported model. Before using this model as the objective function for the AI searching method, the transient simulations of the mathematical model have to be compared with those from the commercial software package; here is the SimPowerSystem™ (SPS™) of SIMULINK. The exact topology model of SPS™ for the system in Figure 1 is shown in Figure 3.

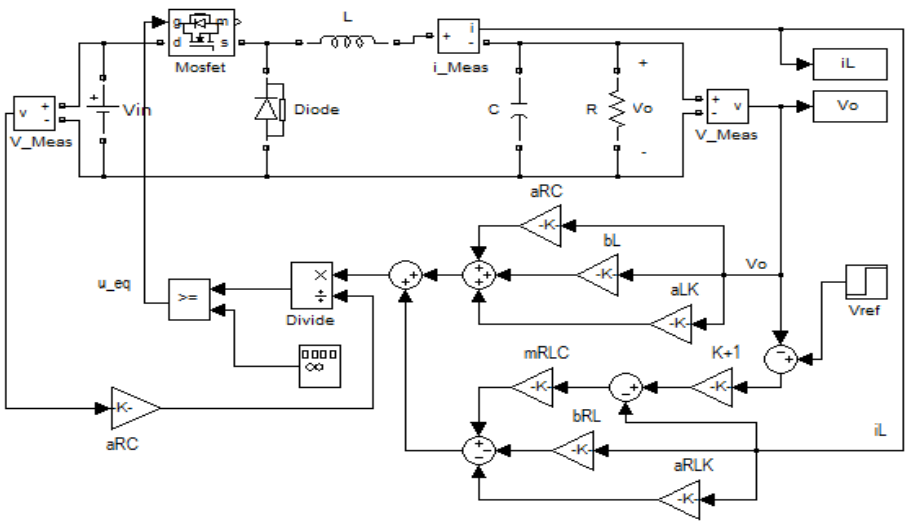

Figure 3. The Exact Topology Model of the System in Figure 1

The obtained model in (1) was coded in MATLAB for simulation comparisons with the exact topology model in Figure 3. The simulated circuit has the following components: V_{in} = 60 V, R = 30 Ω, L = 15 mH, C = 125 μF, T_s = 0.1 ms., a = 3, b = 25, m = 2500, K = 2000. Note that the SMC parameters used in this section were designed from the convention method. The system was simulated to a step change of V_{ref} from 10 V to 15 V that occurs at t = 0.03 s. The output voltage and inductor current responses from the proposed model of (1) compared with the results from SPS™ are shown in Figure 4 and Figure 5, respectively.

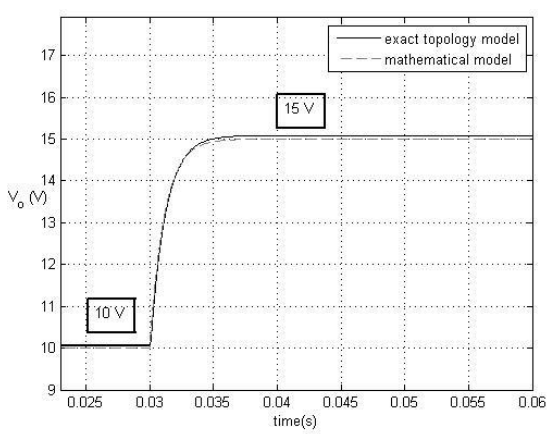

Figure 4. The Compared Output Voltage Responses for Changing Vref from 10 V to 15 V

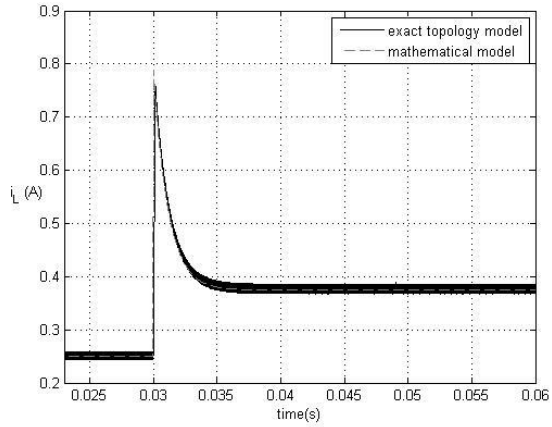

Figure 5. The Compared Inductor Current Responses for Changing Vref from 10 V to 15 V

The computing times taken by MATLAB coding via the mathematical model of (1) are 35 s. while SPS^{TM} consumes 735 s. for a full topology simulation of Figure 3. The comparison of simulation time can be illustrated in terms of computational time saving defined by:

$$\% t_{saving} = \frac{t_{fs} - t_{av}}{t_{fs}} \times 100 \ \% \tag{3}$$

where t_{fs} and t_{av} are the simulation times of full topology and the mathematical model, respectively. According to (3), the reported model can provide $\% t_{saving}$ of 95.24%. This value indicates that the simulation using the mathematical model requires short computational time compared with SPS^{TM}. Hence, the derived model as described in this section is suitable for the optimal SMC design by using the ATS and PSO methods. In Section 3, the ATS and PSO algorithms will be used to tune the SMC parameters to achieve the best output performance in which the simulation of the system in Figure 1 with the different SMC parameters is required during the searching process.

3. The Optimal Sliding Mode Controller Design

In this section, the optimal SMC designs for the buck converter via the ATS and PSO methods are illustrated. The ATS and PSO algorithms are used to determine the appropriate SMC parameters, here are *a*, *b*, *m*, and *K* to achieve the best output performance compared with those designed from the conventional method. The block diagram to explain how to design the SMC parameters using ATS and PSO algorithms is shown in Figure 6. The mathematical model derived from the GSSA method is used inside the objective function as shown in the dash line of Figure 6 to simulate the system during the searching process in which the computational time can be considerably reduced.

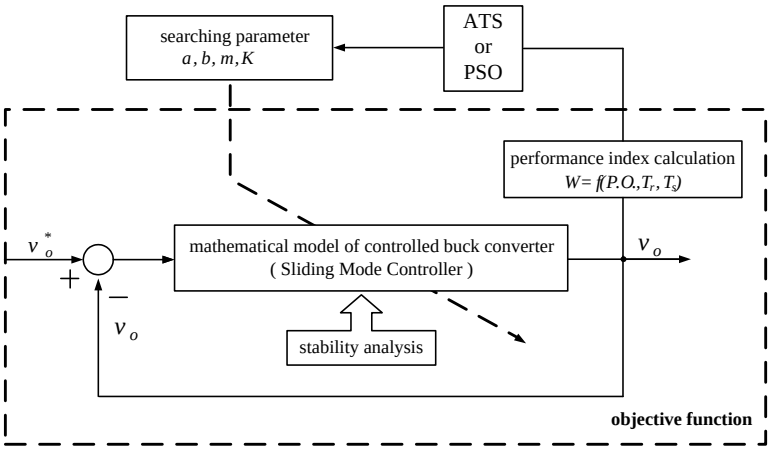

Figure 6. The AI Methods for the Cascade PI Controller Design

In Figure 6, the ATS or PSO algorithms will search the appropriate SMC parameters *a*, *b*, *m*, and *K*. These parameters are used with the mathematical model in (1) with the details in (2) to simulate the system to achieve the transient output response v_o. The response v_o is then used to calculate the *W* value in which this value represents a performance index for each SMC parameter determined from the ATS and PSO. The ATS and PSO will search the appropriate SMC parameters until the minimum value of *W* is obtained. It means that the controller parameters from the searching process provide the best performance of the v_o response. The *W* value can be defined by

$$W(T_r, T_s, P.O.) = \sigma T_r + \alpha T_s + \gamma P.O. \tag{3}$$

and

$$\sigma + \alpha + \gamma = 1 \tag{4}$$

where

P.O. is the percent overshoot of the v_o response.
T_r is the rise time of the v_o response.
T_s is the setting time of the v_o response.
σ, α, and γ are the priority coefficients of T_r, T_s, and *P.O.*, respectively.

In this paper, the values of σ, α, and γ are set to 0.34, 0.33, and 0.33, respectively. In addition, during the searching process, the eigenvalue can be calculated via the matrix **A** in (2) to confirm that the controllers designed from the proposed techniques can provide the best performance with the stable operation. If the exact topology model of Figure 3 is used to simulate the system instead of the dynamic model in (1), the stability analysis cannot be included in the process. Moreover, the simulation time from the model of Figure 3 is very huge as mentioned before in Section 2. Therefore, the exact topology model is not suitable for the ATS and PSO searching processes compared with the mathematical model.

3.1. ATS Algorithm

According to Figure 6, the steps of searching controller parameters by using ATS are as follow:

Step 1: Determine the boundary of parameters. In this paper, the upper and lower limits of *a*, *b*, *m*, and *K* are set to [2 10], [1 100], [100 8000], [100 6000], respectively.

Step 2: Define the initial value for each parameter by random within the search space.

Step 3: Define the radius value (*R*), the one of ATS parameters.

Step 4: Define the condition for ATS back tracking.

Step 5: Define the cost value, here is *W* calculated from (3).

Step 6: Define the maximum of searching iteration for ATS ($count_{max}$). This value is set as a stop criterion for ATS algorithm. In this paper, it is equal to 300 iterations. Note that the more details of ATS algorithm can be found in [3].

3.2. PSO Algorithm

According to Figure 6, the steps of searching controller parameters by using PSO are as follow.

Step 1: Determine the boundary of parameters (the same as ATS algorithm).

Step 2: Define the initial value for position and velocity vectors by random within the search space as defined from Step 1.

Step 3: Define the $NP = 60$, $C_p = 2$, and $C_g = 1.75$.

Step 4: Define the fitness value, here is *W* given by (3) in which it can be calculated from the output response of the objective function as given in the model of (1).

Step 5: Define the maximum of searching iteration for PSO ($NT_{\max}$). In this paper, it is equal to 300 iterations.

The more details of PSO algorithm can be found in [8].

4. Simulation Results

The system of Figure 1 having the different SMC parameters designed from the ATS, PSO, and conventional methods was simulated by using SPS™ in SIMULINK as given in Figure 3. The resulting SMC parameters with their performance index represented by the *W* values are given in Table 1.

Table 1. The Comparison Results Between ATS, PSO, and Conventional Methods

SMC Parameters	Design Method		
	ATS Method	PSO Method	Conventional Method
a	2.8789	2.9380	3
b	90.2589	56.1244	25
m	7018.8	7114	2600
K	4936.9	5518	2000
W	0.000251	0.000251	0.0019

According to Table 1, the controllers designed from the ATS and PSO methods provide the minimum *W* value compared with those of the conventional method. Figure 7 and Figure 8 show the v_o responses to a step change of v_o^* from 15 V to 20 V that occurs at $t = 0.02$ second. The comparison results show that the output responses when the controllers designed by the ATS and PSO methods are better than that from the conventional method in terms of percent overshoot, rise time and setting time under the changing of command input. In addition, the convergences of *W* value during the ATS and PSO searching processes are depicted in Figure 9 and Figure 10, respectively.

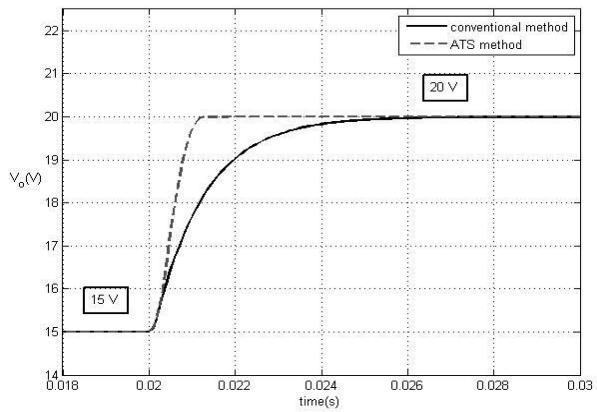

Figure 7. The Comparison Result of vo Responses Between Conventional and ATS Methods

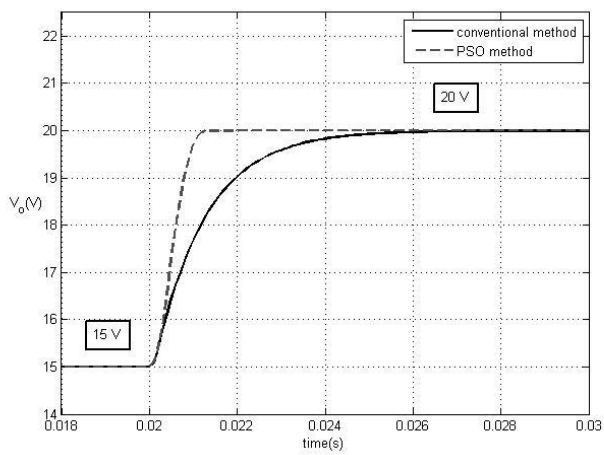

Figure 8. The Comparison Result of vo Responses Between Conventional and PSO Methods

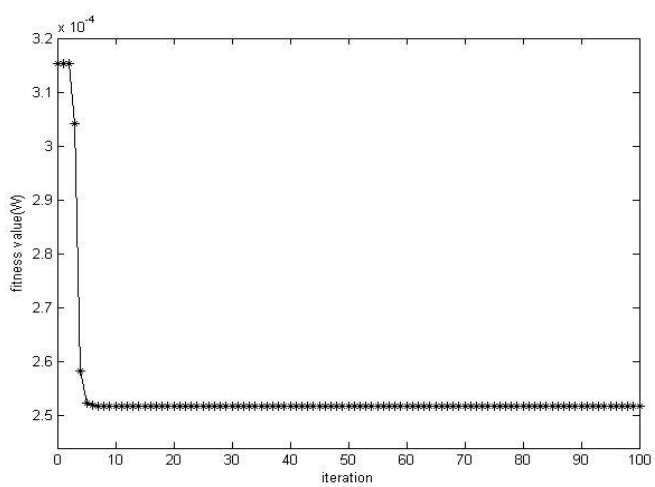

Figure 9. The Convergence of W Value from the ATS Algorithm

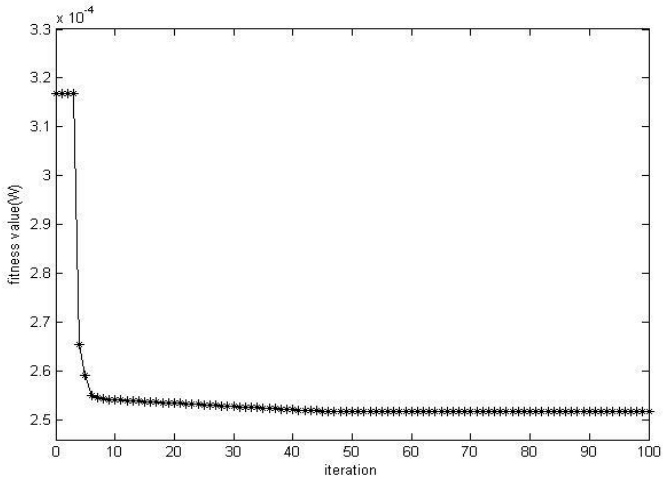

Figure 10. The Convergence of W Value from the PSO Algorithm

As for the stability analysis, the dominant eigenvalue of the system during the searching process from the ATS and PSO algorithms are depicted in Figure 11 and Figure 12, respectively. It can be seen that the dominant eigenvalue of the best solution from the proposed searching methods are located on the left-hand side of the s-plane. Based on the eigenvalue theorem, it means that the system with the controller parameters designed from the ATS and PSO algorithms can provide the stable operation.

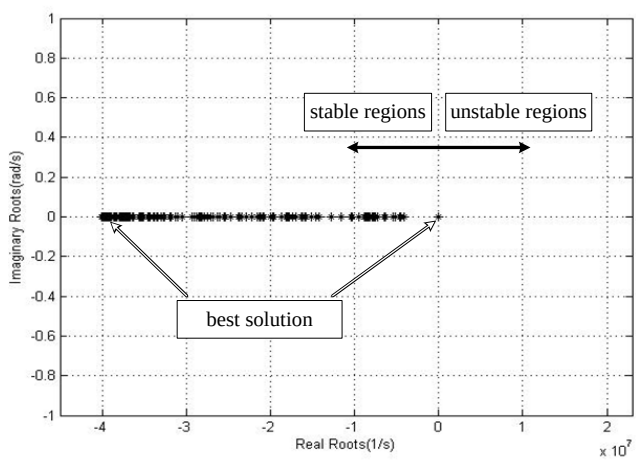

Figure 11. The Eigenvalue Plot during the ATS Searching Process

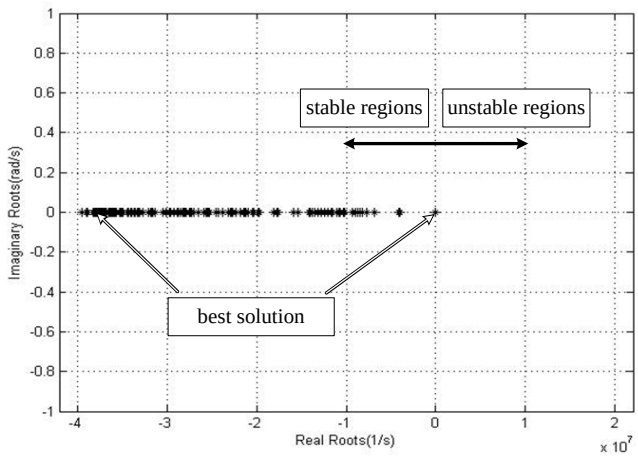

Figure 12. The Eigenvalue Plot during the PSO Searching Process

5. Experimental Results

The test rig of the system in Figure 1 is shown in Figure 13.

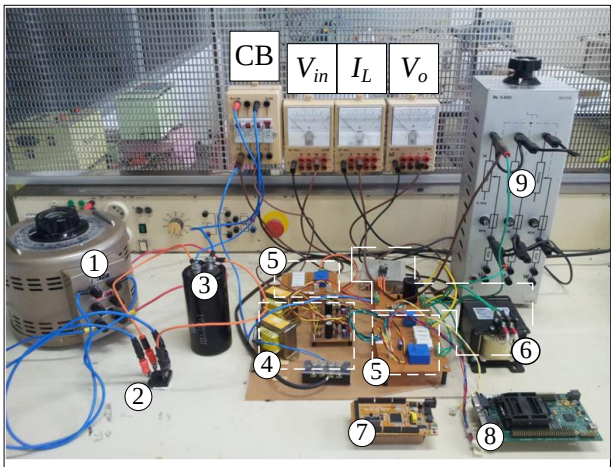

1. variac
2. Bridge Rectifier
3. Capacitor Filter
4. DC ±15V
5. Voltage and Current sensor
6. DC – DC Buck converter
7. ET-EASY MEGA1280
8. DSP- eZdsp^{TM}F28335
9. Resistance

Figure 13. The Testing Rig of the Considered Power System

The controller of the rig was implemented using. The buck converters have been constructed using 3A and 220 V. The SMC parameters as shown in Table 1 were coded in the DSP eZdsp^{TM} F28335 as shown in the rig of Figure 13. The comparison of the output voltage responses between the controllers designed from the conventional and ATS methods for a

step change of the voltage command v_o^* from 10 V to 12 V that occurs at t = 0.1 s is given in Figure 14. Figure 15. is the result when the SMC parameters are designed from the PSO algorithm. Similarly, for other operating points, the experimental results for a step change of the voltage command v_o^* from 10 V to 14 V and 10 V to 16 V are shown in Figure 16-Figure 19, respectively.

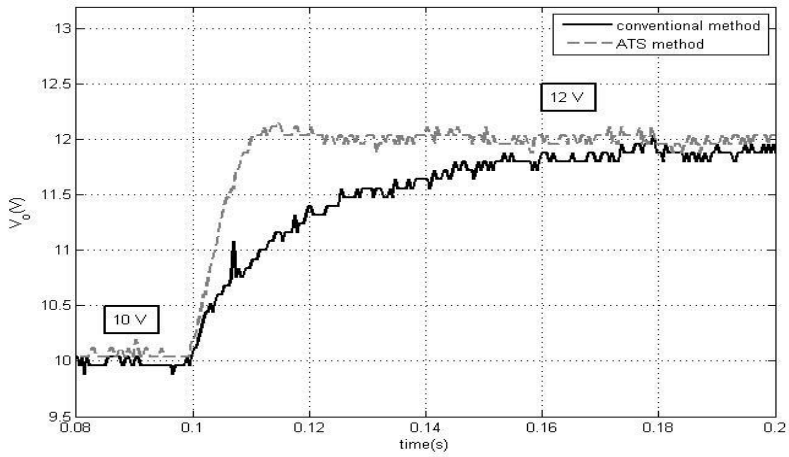

Figure 14. Experimental Results of vo for Changing the v_o^* from 10 V to 12 V with ATS Method

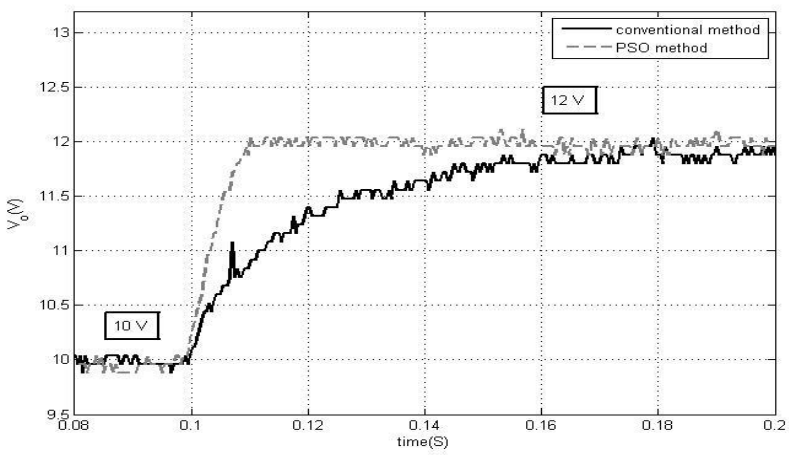

Figure 15. Experimental Results of vo for Changing the v_o^* from 10 V to 12 V with PSO Method

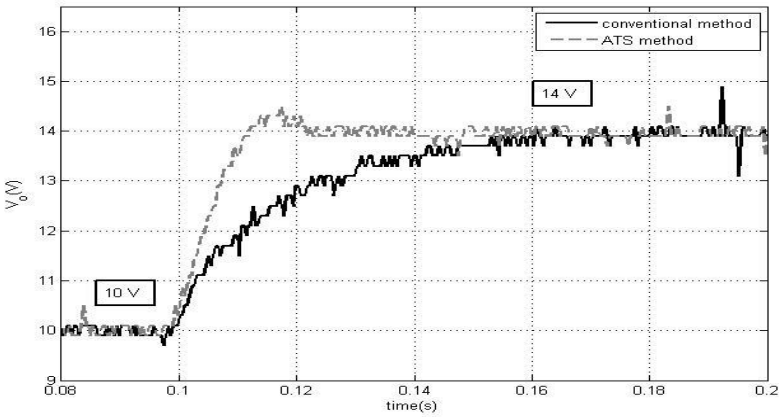

Figure 16. Experimental Results of vo for Changing the v_o^* from 10 V to 14 V with ATS Method

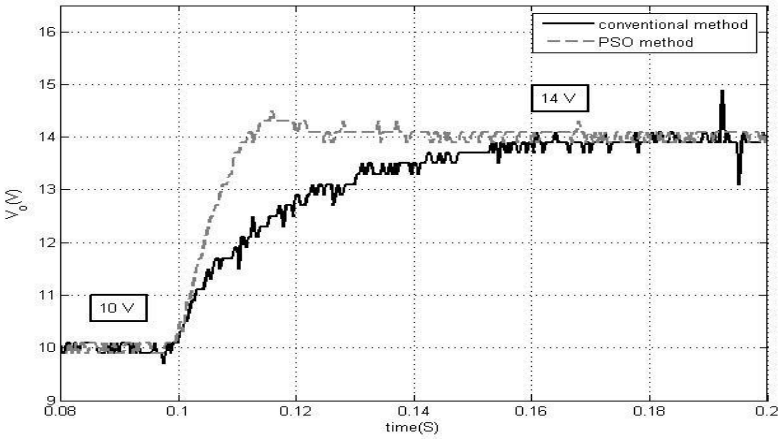

Figure 17. Experimental Results of vo for Changing the v_o^* from 10 V to 14 V with PSO Method

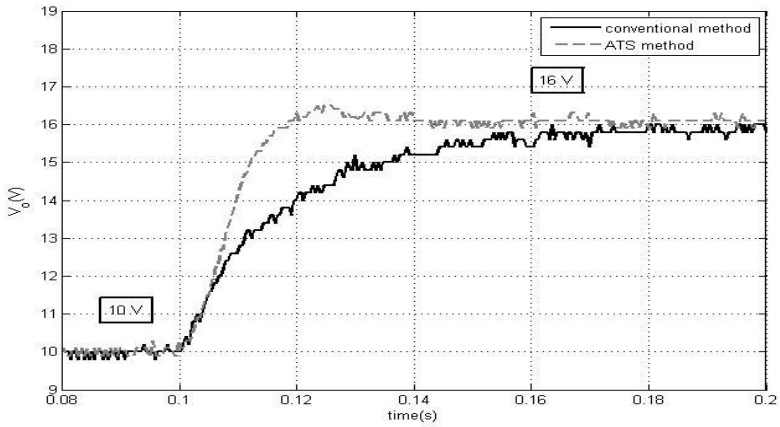

Figure 18. Experimental Results of vo for Changing the v_o^* from 10 V to 16 V with ATS Method

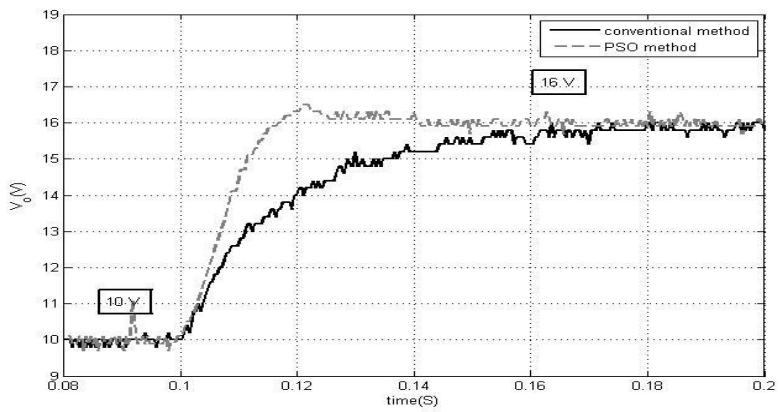

Figure 19. Experimental Results of vo for Changing the v_o^* from 10 V to 16 V with PSO Method

The comparison results from the simulation and experiment show that the output responses when the SMC designed by the ATS and PSO methods are better than that from the conventional method in terms of percent overshoot, rise time and setting time under the changing of command input.

6. Conclusion

The paper presents the cooperation between the averaging model derived from the GSSA method and the AI methods called the ATS and PSO algorithms to design the appropriate SMC parameters of the buck converter. The resulting output responses using the ATS and PSO designs are better than that of the conventional method for variations in a command input. Moreover, the paper also show that the simulation of the switching converter system using the averaging model consumes the faster computational time compared with the simulation time of the exact topology model from the software package. The eigenvalue of

the system can be also calculated via the proposed averaging model for the stability analysis during the searching process. Hence, the reported dynamic model is suitable for the optimal controller design application in which the repeating calculation during the searching process is needed. In the paper, the experimental results from the testing rig are also used to support the simulation results. The results show that the proposed design technique is very useful for engineers. The proposed method can provide the best output performance with the stable operation confirmation. The concept of the optimal design for the buck converter using the AI methods described in the paper can be applied to other converters such as boost converters, buck-boost converters, and cuk converters.

Acknowledgements

This work was supported by Suranaree University of Technology (SUT) and by the office of the Higher Education Commission under NRU project of Thailand.

References

[1] T. Kulworawanichpong, K-L. Areerak, K-N. Areerak and S. Sujitjorn, "Harmonic Identification for Active Power Filters Via Adaptive Tabu Search Method", LNCS (Lecture Notes in Computer Science), Springer-Verlag, **(2004)**, pp.687-694.

[2] T. Kulworawanichpong, K-L. Areerak, K-N. Areerak, P. Pao-la-or, D. Puangdownreong, and S. Sujitjorn, "Dynamic Parameter Identification of Induction Motors Using Intelligent Search Techniques", Proceedings of IASTED International Conference on Modelling, Identification, and control (MIC2005), **(2005)** February 14-16; Innsbruck, Austria.

[3] S. Sujitjorn, T. Kulworawanichpong, D. Puangdownreong,and K-N. Areerak. Adaptive Tabu Search and Applications in Engineering Design, "Book Chapters in Integrated Intelligent Systems for Engineering Design", IOS Press, **(2006)**, pp.233-257.

[4] D. Puangdownreong, K-N. Areerak, A. Srikaew, S. Sujitjorn, and P. Totarong, "System Identification via Adaptive Tabu Search", Proceedings of IEEE International Conference on Industrial Technology (ICIT02), **(2002)** December 11-14; Bangkok, Thailand.

[5] D. Puangdownreong, K-N. Areerak, K-L. Areerak, T. Kulworawanichpong, and S. Sujitjorn, "Application of Adaptive Tabu Search to System Identification", Proceedings of IASTED International Conference on Modelling, Identification, and control (MIC2005), **(2005)** February 14-16; Innsbruck, Austria

[6] K-N. Areerak, T. Kulworawanichpong, and S. Sujitjorn, "Moving Towards a New Era of Intelligent Protection through Digital Relaying in Power Systems", Lecture Notes in Computer Science, Springer-Verlag, **(2004)**, pp.1255-1261.

[7] T. Narongrit, K-L. Areerak, and K-N. Areerak, "Design of an Active Power Filter using Genetic Algorithm Technique", Proceedings of the 9th WSEAS International Conference on Artificial Intelligenct, Knowledge Engineering and Data Bases (AIKED'10), **(2010)** February 20-22; Cambridge, United Kingdom.

[8] U. Leeton, D. Uthitsunthorn, U. Kwannetr, N. Sinsuphun and T. Kulworawanichpong, "Power Loss Minimization Using Optimal Power Flow Based on Particle Swarm Optimization", Proceedings of International Conference on Electrical Engineering/Electronics Computer Telecommunications and Information Technology (ECTI-CON), **(2010)** May 19-21; Chaing Mai, Thailand.

[9] G. Lirui, H. Limin, Z. Liguo, L. Weina and H. Jie, "Reactive Power Optimization for Sidtribution Systems based on Dual Population Ant Colony Optimization", Proceedings of 27th Chinese Control Conference (CCC 2008), **(2008)** July 16-18; Yunnan, China.

[10] S. Chonsatidjamroen, T. Sopapirm, K-N. Areerak and K-L. Areerak, "Mathematical Model of a Controlled Buck Converter with a Resistive Load", European Journal of Scientific Research, vol. 4, no. 52, **(2011)**.

[11] A. Emadi, "Modelling and Analysis of Multiconverter DC Power Electronic Systems Using the Generalized State-Space Averaging Method", IEEE Trans. on Indus. Electronics, vol. 3, no. 51, **(2004).**

[12] A. Emadi, "Modeling of Power Electronic Loads in AC Distribution Systems Using the Genearlized State-Space Averaging Method", IEEE Trans. on Indus. Electronics, vol. 5, no. 51, **(2004).**

Authors

S. Chonsatidjamroen was born in Chonburi, Thailand, in 1986. He received the B.S. degree in electrical engineering from Suranaree University of Technology (SUT), Nakhon Ratchasima, Thailand, in 2008, where he is currently studying toward the M.Eng. degree in electrical engineering. His main research interests include the DC/DC converter, AI application, simulation and modeling.

K-N. Areerak received the B.Eng. and M.Eng degrees from Suranaree University of Technology (SUT), Nakhon Ratchasima, Thailand, in 2000 and 2001, respectively and the Ph.D. degree from the University of Nottingham, Nottingham, UK., in 2009, all in electrical engineering. In 2002, he was a Lecturer in the Electrical and Electronic Department, Rangsit University, Thailand. Since 2003, he has been a Lecturer in the School of Electrical Engineering, SUT. He received the Assistant Professor in Electrical Engineering in 2011. His main research interests include system identifications, artificial intelligence application, stability analysis of power systems with constant power loads, modeling and control of power electronic based systems, and control theory.

K-L. Areerak received the B.Eng, M.Eng, and Ph.D. degrees in electrical engineering from Suranaree University of Technology (SUT), Thailand, in 2000, 2003, and 2007, respectively. Since 2007, he has been a Lecturer and Head of Power Quality Research Unit (PQRU) in the School of Electrical Engineering, SUT. He received the Assistant Professor in Electrical Engineering in 2009. His main research interests include active power filter, harmonic elimination, AI application, motor drive, and intelligence control system.