International Journal of Control and Automation
Vol.7, No.1 (2014), pp.409-426
http://dx.doi.org/10.14257/ijca.2014.7.1.37

Intelligent Controller Design for a Blowdown Supersonic Wind Tunnel

A. Nazarian Shahrbabaki[1], M. Bazazzadeh[2], A. Shahriari[3] and M. Dehghan Manshadi[4]

Department of Mechanical & Aerospace Engineering, Malek-Ashtar University of Technology, Shahinshahr, Isfahan, Iran

[1]anazarian@mut-es.ac.ir, [2]bazazzadeh@mut-es.ac.ir, [3]al.shahriari@gmail.com, [4]mdmanshadi@alum.sharif.edu

Abstract

In this paper, first, the nonlinear mathematical model of special Blowdown Supersonic Wind Tunnel (BSWT) consisting of a set of ordinary differential and algebraic equations is developed in Matlab/Simulink software environment. At the second step, an Artificial Neural Network (ANN) is used for finding the optimum membership functions of the Fuzzy Logic Controller (FLC) system. This method can help for reasonable system recognition. In this step, by designing and training a feed-forward multilayer perceptron neural network according to the available database which is generated from mathematical model; a number of different reasonable functions for Valve Opening Angle (VOA) in various test conditions are determined. These functions are used to define the desired VOA fuzzy Membership Functions (MFs). Next, a Proportional-Derivative FLC (PD-FLC) system is developed in the Simulink toolbox to control a relationship between the stagnation pressure and the temperature in the plenum chamber, which presents the Reynolds number in the test section. A synthetic algorithm combined from FLC and ANN is used to design a controller for a BSWT with the aim of achieving the accurate and acceptable desired results. Performance of the BSWT using optimized fuzzy controller by ANN is found to be satisfactory, as confirmed by the results.

Keywords: *Blowdown supersonic wind tunnel (BSWT), fuzzy logic control (FLC), Reynolds number, neural networks, mathematical model, control valve*

1. Introduction

Blowdown Supersonic wind tunnels (BSWTs) are designed to produce supersonic air speeds for aerodynamic analysis and testing on scaled models under well controlled test conditions. Thus, the knowledge of flow characteristics, Mach number, Reynolds number, pressures and temperatures within the tunnel are vital to obtaining accurate test data. Intermittent BSWT are carefully calibrated for this purpose in order to fully utilize the limited testing time [1, 2].

A blowdown intermittent wind tunnel typically provides test section conditions of constant Mach number, total pressure, and Reynolds number for a wind tunnel run of typically 5 to 80 seconds duration. The Reynolds number is maintained at a constant value by a pneumatic control variable area valve. This control valve controls a relationship between the stagnation pressure and the temperature in the plenum chamber, which presents the Reynolds number in the test section. During a supersonic blowdown run, the storage tank pressure, and its

ISSN: 2005-4297 IJCA

temperature decrease continuously. Thus, to maintain a constant Reynolds number, the control valve must open progressively [3].

The schematic diagram of the BSWT systems is shown in Figure 1. In the figure, the major subsystems are a high pressure system or a storage tank, a pressure regulator valve or an automatic control valve, a plenum chamber, a Converge- Diverge (CD) nozzle, a test section, a diffuser and a silencer.

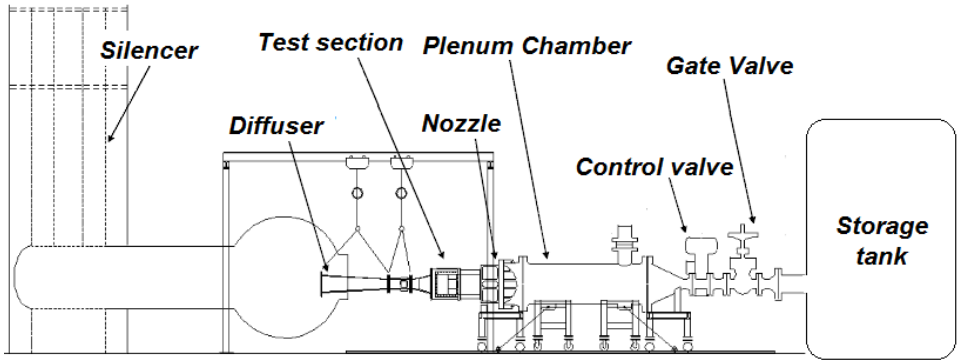

Figure 1. Schematic diagram of the blowdown supersonic wind tunnel

As it was mentioned, in the BSWTs to maintain desired test conditions, effective flow control is needed. The previously mentioned difficulties in modeling supersonic tunnels usually lead to simplified, mathematical models on which, complicated robust controllers need to be designed to overcome model discrepancies for practical implementation on large scale wind tunnels. The method for maintaining a constant Reynolds number and stagnation pressure with a decreasing storage pressure has evolved over the last half century from a primitive manual operation to highly sophisticated neural network controllers [4, 5].

Most of the recent systems which developed are based on real-time controllers. In one of papers, Hwang [6] used the governing equations of the tunnel by assuming choked flow in the control valve of a BSWT and nominal values for stagnation temperatures and pressures for a fixed throat setting and designed a LQG/LTR controller that is highly robust to compensate for model discrepancies.

Today's some controllers have been developed for linearized models and successfully applied. Miwa [7] designed a gain scheduled PID controller for a transonic blowdown tunnel based on a simplified linear model. Effective control is achieved by Zanten [8] by using master and slave controllers in the form of pressure control and valve control respectively for a BSWT at Delft University in the Netherlands. The overall system forms a dual loop controller with feedback from the plenum pressure and feedback from the valve position. Also Matsumoto et al. [9] used a preprogrammed controller as an alternative to complicated controllers for the supersonic wind tunnel at the University of Texas at Arlington in the USA.

In a broad perspective, knowledge-based approaches underlie what is called “soft computing”. These methods include Fuzzy Logic (FL), Neural Networks (NN), Genetic Algorithms (GA) and Probabilistic Reasoning (PR). In addition, these methodologies in most part are complimentary rather than competitive [10].

FL has been the area of heated debate and much controversy during the last decades. The first paper in fuzzy set theory, which is now considered to be the seminar paper of the subject, was written by Zadeh [11], who is considered the founding father of the field. In that work, Zadeh was implicitly advancing the concept of approximate human reasoning to make effective decisions on the basis of the available imprecise, linguistic information. The first

implementation of Zadeh's idea was accomplished by Mamdani [12] which demonstrated the ability of Fuzzy Logic Controller (FLC) for a small model steam engine. After this pioneer work, many consumer products and industrial applications using fuzzy technology have been developed and are currently available in whole of the world.

FL is one of the most effective approaches for intelligent control of complex nonlinear systems. One of the important advantages of this approach is the simplicity of utilization. The other one is feasibility of increasing the number and type of MFs and rules while it has wide variety of rules definition.

The intelligent controlling approaches will provide the required scope for wind tunnels to be more efficient, safe and economic. These approaches offer the potential for creating extremely safe, highly reliable systems. The approaches will help to enable a level of performance that far exceeds that of today's wind tunnel systems in terms of reduction of harmful emissions, maximization of run time, and minimization of noise, while improving system affordability and safety.

Generally, designing an appropriate controller for each specific wind tunnel includes two steps: first, an accurate mathematical model to simulate the wind tunnel behavior individually and second, system recognition. The system recognition as the most important step in creating suitable MFs and rules is the knowledge of wind tunnel performance parameters and specially their relation during test operation.

In this paper, the nonlinear mathematical model of special BSWT is developed in Simulink software simulator. At the second step, an ANN is used for finding the optimum membership functions of the FLC system. In this step, by designing and training a feed-forward multilayer perceptron neural network according to the available database which is generated from the mathematical model; a number of different reasonable functions for VOA in various test conditions are determined. These functions are used to define the desired VOA fuzzy MFs. Next, a PD-FLC system is developed in the Simulink toolbox to control a relationship between the stagnation pressure and temperature in the plenum chamber, which presents the Reynolds number in the test section.

2. Wind Tunnel Mathematical Model

2.1. Introduction

Mathematical models of wind tunnels process are very complicated because they involve viscous effects and distributed characteristics. In this paper, a nonlinear mathematical model of a BSWT is developed based on isentropic relation in Simulink software environment.

Simulink provides an easy-to-use, graphical, modeling and simulation development environment for developing time-based simulations in a wide range of applications [13, 14]. Also it is capable of code generation using associated tools. So, a dynamic model for a specific wind tunnel is developed using Matlab simulation environment and its Simulink toolbox.

The dynamic analysis of a BSWT and its control system is divided into five sections; storage tank, control valve, plenum chamber, supersonic CD nozzle, and test section. Figure 2 shows a schematic diagram of the BSWT with some of the variables needed for designing the FLC. In Figure 2, plenum volume (V_P), and tank volume (V_T) are based on the facility configuration and they are constant. Other facility constants are the test section area (A), and the desired test section Mach number (M). Also the test section setpoint Reynolds number (Rey_D) must be specified by the user in Simulink software. Real-time measurements of the storage tank and plenum chamber pressures (P_T and P_P) are critical to the operation of the control program. T_T and T_P (tank and plenum stagnation temperatures) can also be measured

by data accusation system from real-time operation. These parameters are more important when the Reynolds number is proposed, because the temperature of the air in the storage tank drops during an actual blowdown run.

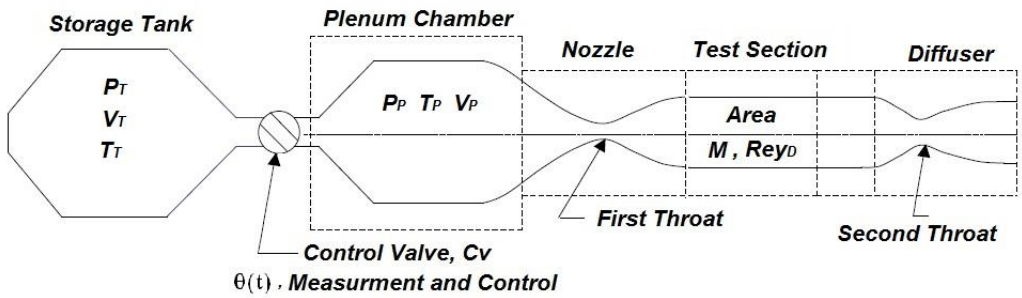

Figure 2. The block diagram of the BSWT and its essential variables

In BSWTs the normal shock moves into the test section, where it occurs at the test section Mach number, and the power requirements correspond to the normal shock losses at the design Mach number. At this point in the tunnel starting process the power requirements are not influenced by the diffuser design because flow in the diffuser is still subsonic. Hence, in spite of the diffuser, the power requirements for getting a supersonic tunnel started correspond to normal shock losses at the design Mach number and are high at the higher Mach numbers. More customarily, the tunnel engineer, rather than speaking of "power", uses the ratio of necessary stagnation pressure to diffuser exit pressure, which he calls "pressure ratio". By including mass flow the two are affinity related. In this case, the theoretical pressure ratio required with a shock wave in the test section is equal 7. With the normal shock in the test section, only a slight increase in power should be required to move the shock through the second throat of the diffuser because the normal shock Mach number, and consequently the normal shock losses, should decrease as the shock moves through the converging section of the diffuser.

2.2. Control valve

Blowdown wind tunnels are almost invariably designed for operation at a constant Reynolds number during any run. Consequently, the pressure regulator or control valve is a special valve used to provide constant Reynolds number while the available pressure and temperature in the storage tank are decreasing. In theory, almost any valve could be used for this purpose. In practice, however, valves not designed for this purpose make very poor regulators. Basically, the control valve is a valve in which operates from a fully closed into a fully open position, and will reach to the controlled Reynolds number. Fully open, the flow area through the valve should be approximately equal to that of the pipe supplying air to the valve. If the flow area through the valve is less than that of the lead-in pipe, higher storage tank pressures will be required to maintain a given tunnel Reynolds number, and wind tunnel run time will be reduced.

In this regard, the first step of the simulation is calculating the mass flow rate through the control valve. This parameter is determined using the standard valve sizing relation as below [15, 16].

$$\dot{m}_V = C_v N_8 F_P Y P_T \sqrt{(XM_a)/(T_T Z)} \tag{1}$$

where, C_v is the valve sizing coefficient, N_8 is the constant for engineering units, F_P is a correction factor that accounts for pressure losses due to piping fittings such as reducers, elbows, or tees that might be attached directly to the inlet and outlet connections of the control valve to be sized, Y is expansion factor ($Y=1-X/3F_k \cdot X_T$) where X_T is the pressure drop ratio factor for valves installed without attached fittings or critical pressure drop ratio factor, F_k is the ratio of specific heats factor, X is ($X=(P_T-P_P)/P_T$) the valve pressure drop ratio, where P_P is the downstream pressure of control valve or plenum chamber stagnation pressure, and P_T is tank stagnation pressure. Also M_a is the molecular weight of the air, and Z is the compressibility factor of the air.

It should be mentioned that C_v is functions of θ (VOA) and should be provided by the manufacturer of the control valve. For the VOA simulation during the wind tunnel test, some lookup tables were set to the manufacturer's data [17].

2.3. Chock factor

Choked flow is a fluid dynamic condition associated with the Venturi effect. When the fluid flow at a given pressure and temperature passes through a restriction (such as the throat of a CD nozzle or a valve in the pipe line) into a lower pressure, the fluid velocity will be increased. At initially subsonic upstream conditions, the conservation of mass principle requires the fluid velocity to increase as it flows through the smaller cross-sectional area of the restriction. At the same time, the Venturi effect causes the static pressure, and therefore the density, to decrease downstream past the restriction. Choked flow is a limiting condition which occurs when the mass flow rate will not increase with a further decrease in the downstream pressure environment while upstream pressure is fixed. Choked flow results in high noise levels, vibration, pipe stress, and severe erosion and pitting of the valve seat and disc. Choked flow may result from an over-sized control valve or if an inappropriate type of valve is specified for a given application. In this part, Chock Factor (CF) is introduced as a parameter which can mathematically model chock condition. In this case, whenever CF is 1, it means the control valve works in chock condition. The CF is determined as follow:

$$CF = \frac{X}{X_{TP}} \tag{2}$$

where, X is the valve pressure drop ratio, and X_{TP} is the pressure drop ratio factor for valves installed with attached fittings.

2.4. The Reynolds number

It is possible to control the test section condition through the control of the stagnation pressure and temperature in the plenum chamber. However, during the evacuation of the air from storage tank, the stagnation temperature is not constant [18]. Moreover, this variation changes the Reynolds number in the test section. So, in this paper, a FLC system is desired on the Reynolds number definition based on an isentropic process as below. The general equation for the Reynolds number is calculated as follows [19, 20].

$$\frac{\mathrm{Re}_{ts}}{L} = \frac{\rho_s V}{\mu} \tag{3}$$

In Equation (3), Re_{ts} is the Reynolds number in the test section, L is a characteristic linear dimension (travelled length of the fluid or hydraulic diameter) (m), ρ_s is the static fluid density (kg/m^3), V is the mean velocity of the object relative to the fluid (m/s), and μ is the dynamic viscosity (Pa.s).

With considering the following equations, the static density and the air velocity can be evaluated form Equations (6) and (7) [21].

$$\left(\frac{T}{\tau}\right)_0 = \left[1+\frac{\gamma-1}{2}M^2\right] = F \tag{4}$$

$$\left(\frac{P}{p}\right)_0 = \left[1+\frac{\gamma-1}{2}M^2\right]^{\frac{\gamma}{\gamma-1}} = F^{\frac{\gamma}{\gamma-1}} \tag{5}$$

$$(\rho_s)_0 = \left(\frac{p}{R\tau}\right)_0 = \left(\frac{P}{RTF^{\frac{1}{\gamma-1}}}\right)_0 \tag{6}$$

$$V = M\sqrt{\gamma R\tau} = MF^{-\frac{1}{2}}\sqrt{\gamma RT_0} \tag{7}$$

where, T is the stagnation pressure, τ is the static temperature, γ is the specific heat ratio, M is the Mach number, P is the stagnation pressure, p is the static pressure, ρ_s is the static density, R is the gas constant, and subscript "0" refers to the plenum chamber condition.

So the Reynolds number can be written as a function of flow stagnation condition as Equation (8).

$$\frac{\mathrm{Re}_{ts}}{L} = \zeta\frac{P_0}{\mu\sqrt{T_0}} \tag{8}$$

In Equation (8), ζ is a constant parameter when Mach number is stable, and it is presented in Equation (9). Also P_0 is the plenum stagnation pressure, T_0 is the plenum stagnation temperature, and μ is the dynamic viscosity.

$$\zeta = M\sqrt{\frac{\gamma}{R}}F^{-\frac{\gamma+1}{2(\gamma-1)}} \tag{9}$$

It should be noted that the dynamic viscosity is function of the stagnation pressure and temperature. In this respect, some 2D Lookup tables are developed in simulink software environment to estimate the viscosity variations in different plenum pressure and temperature during a wind tunnel run.

According to Equation (8), the temperature variation is another requirement for the proposed FLC development. Since the Reynolds number is a function of the relationship between the stagnation pressure and temperature, it’s necessary to consider the temperature variation in the control algorithm as well as possible. Figure 3 shows the temperature variation for a Mach 3 blowdown run. The figure, which is based on actual test data and simulation results, is generated from temperature sensors estimation in the storage tank.

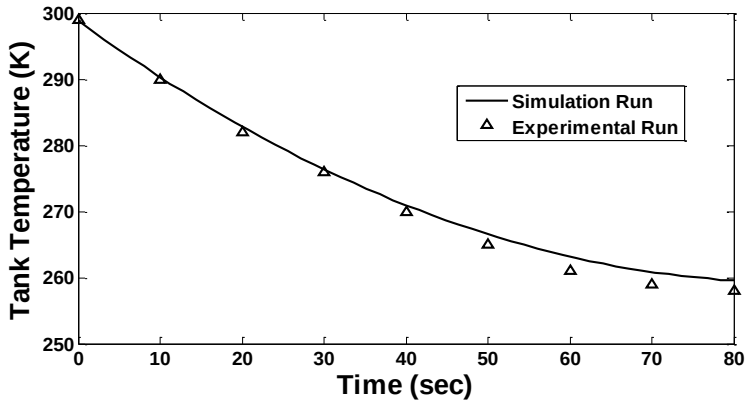

Figure 3. Temperature variation in the storage tank for a Mach 3 blowdown run

3. Wind Tunnel Simulator Model (WTSM)

3.1. Facility and requirements

The wind tunnel is operated using a 12 inch diameter, pneumatically-driven automatic butterfly valve (Bray Control Valve), which controls the flow from the storage tank to the plenum chamber to maintain a constant Reynolds number as close as possible to a setpoint Reynolds number. The storage tank has a volume of 220 m^3 and it is filled with compressed, dry air at about 1.2 MPa before a run. A pressure transducer and a thermocouple are installed in the plenum chamber to measure the stagnation pressure and temperature. The tunnel has a Mach number range of 1.5 to 3, a Reynolds number range of 25~100 x 10^6/m and has up to 72 s of usable run time.

3.2. WTSM development

The wind tunnel model is constructed with a component approach for ease of modification and replacement with different tunnel components. The precision of WTSM results, dependents on the precision of each component module results.

Each component can be instantiated from a software library module developed to represent the functions of that particular type of component. Each module is a functional unit with its own set of inputs and outputs (I/O). Each can function as an independent component. For example the control valve module can be used as a stand-alone component, and it can be used to instantiate valve in the wind tunnel model. The I/O board of control valve and its Simulink model are presented in Figure 4. The internal layout of this component is shown in Figure 5.

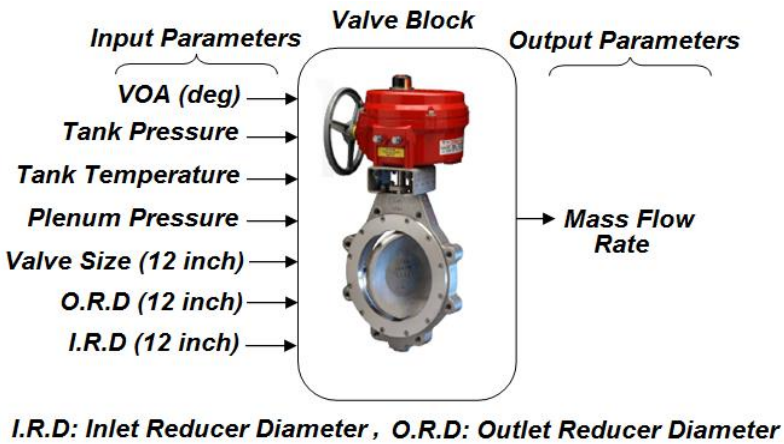

Figure 4. The control valve's I/O board

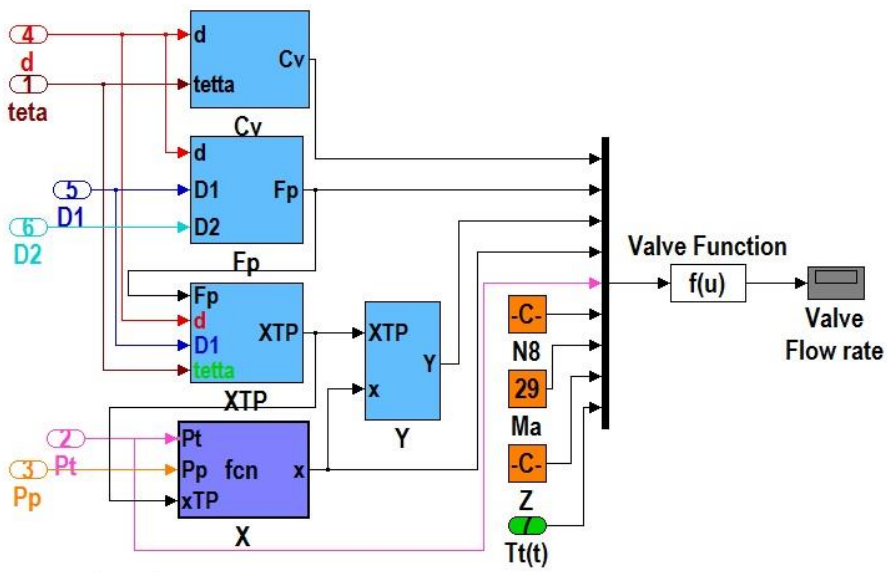

Figure 5. Subsystem's contents

The wind tunnel transient operation can be indicated by WTSM's outputs. Table 1 presents some of these outputs.

Table 1. The WTSM's outputs

Modules	Outputs
Storage Tank	Pressure and Temperature (P_t, T_t)
Control Valve	C_v, $\dot{m}_V$, x, and Y, Chock Factor
Plenum Chamber	Pressure and Temperature (P_p, T_p)
CD Nozzle	Pressure and flow rate (P_n, $\dot{m}_n$)
Test Section	Mach and Reynolds number (M, Re)

Among the model outputs, four of them are the most important, including: the Reynolds number per meter (m^{-1}), plenum pressure (Pa), control valve flow rate ($kg.s^{-1}$), and valve sizing coefficient (-).

Figure 6 presents the schematic diagram of the WTSM and its more important inputs and outputs (I/O).

Figure 6. The schematic diagram of the WTSM

The WTSM include some component modules such as; storage tank, control valve, plenum chamber, nozzle, and test section which are modeled as lumped parameter thermodynamic systems. The model can be developed to a stage-by-stage fashion, if we have required authentic performance data of each component. The supersonic WTSM development is developed in Matlab/Simulink software environment as Figure 7.

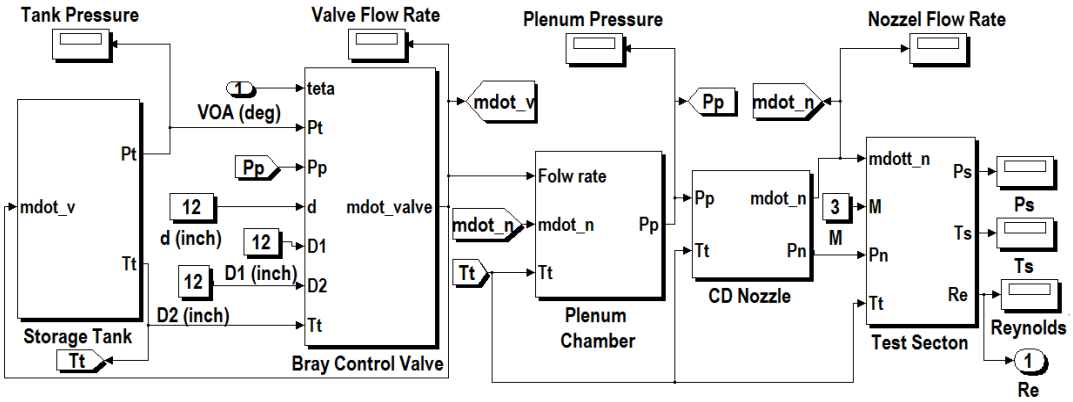

Figure 7. The supersonic wind tunnel simulator model (WTSM)

Now, to present an efficient method to estimate the VOA function which is of great importance among the WTSM input controlling functions, some different reasonable VOA functions are applied via the wind tunnel model, and then some important tunnel continuous time operation parameters (such as test section Reynolds number) are obtained. These parameters and the VOA functions provide a precious database which can be used by a neural network.

Each of the foresaid VOA functions as an important part of the database is a series of two dimensional vectors. As a general rule, the valve characters and its actuator put some constraints on variation of VOA rate. In this regard, the derivative of a VOA

function should be restricted by some prespecified values. By considering all of the foresaid constraints and the valve map, a series of discrete points would be obtained. These points are used to estimate the VOA functions.

4. Neural network training

Neural networks are a powerful technique to solve many real world problems. They have the ability to learn from experience in order to improve their performance and to adapt themselves to changes in the environment. In addition to that, they are able to deal with incomplete information or noisy data and can be very effective especially in situations where it is not possible to define the rules or steps that lead to the solution of a problem.

By designing and training a feed-forward multilayer perceptron neural network according to the available database; we estimate a number of different reasonable VOA functions providing the desired tunnel performance parameters for various test conditions. In fact, the proposed NN simulates the tunnel performance backwardly. So a series of VOA functions would be obtained for various test conditions. These functions will be used in the process of MFs definition for designing a FLC.

The network input layer consists of four neurons which are the most important wind tunnel performance parameters and acquired by the mathematical model. There are ten neurons in the hidden layer. The output layer includes one neuron as the VOA rate. The proposed neural network is shown in Figure 8.

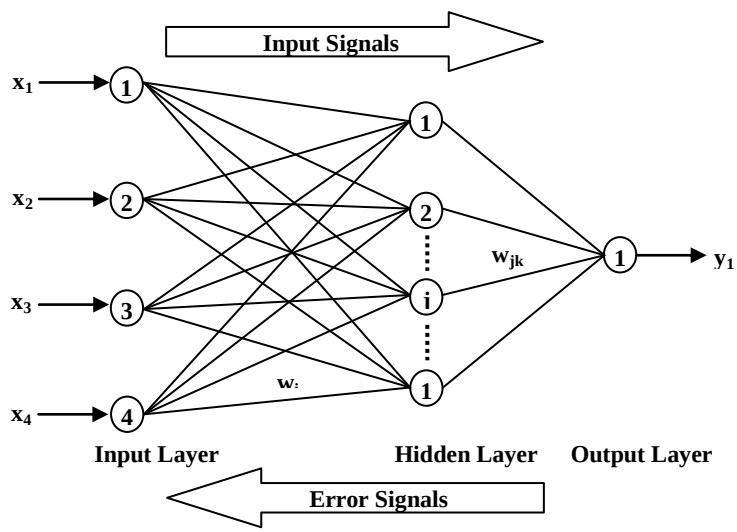

Figure 8. The three-layer back propagation neural network

We use back propagation algorithm as a reliable and well-known algorithm to train the network. Applying this algorithm would minimize output error by changing the synapse weights. By the way, four hundred training data and fifty testing data are used by the network. The network activity function is as Equation (10).

$$f(x) = 1/(1+e^{-x}) \tag{10}$$

Since above function provides normalized outputs between zero and one; so the inputs of the network should be normalized too. At last, the proposed network would achieve to acceptable error by 3800 epochs and training process finish.

5. Designing the Controller by the Aid of Fuzzy Logic Method

Fuzzy Logic (FL) is an increasingly popular method of handling systems associated with uncertainty, unmodeled dynamics, or simply where human experience is required. Its ability to deal with imprecise data can often offer an immediate benefit over conventional mathematical reasoning. It has been widely employed in control problems, particularly due to its ability to mimic the behavior of nonlinear plants. By ensuring that a properly formulated rule base is found, a fuzzy system can provide smooth transitions between operating regimes [22, 23].

A FLC utilizes FL to convert linguistic information based on expert knowledge into an automatic control strategy. In order to use the FL for control purposes, a front-end "fuzzifier" and a rear-end "defuzzifier" are added to the usual input-output data set. A FLC commonly consists of four sections: rules, fuzzifier, inference engine, and defuzzifier. Once the rule has been established, the controller can be considered as a nonlinear mapping from the input to the output. According to Figure 7, the block diagram of the generalized indistinct controller consists of four elements as below.

(1) Fuzzification block, transforming input physical values yi into corresponding linguistic variables μ (yi).

(2) Fuzzy Rule Base, including; 2-1) knowledge base, containing rules table for logic output block. 2-2) Logic output block, transforming input linguistic variables into output with some belonging functions.

(3) Defuzzification block, transforming output linguistic variables into physical control influence [12].

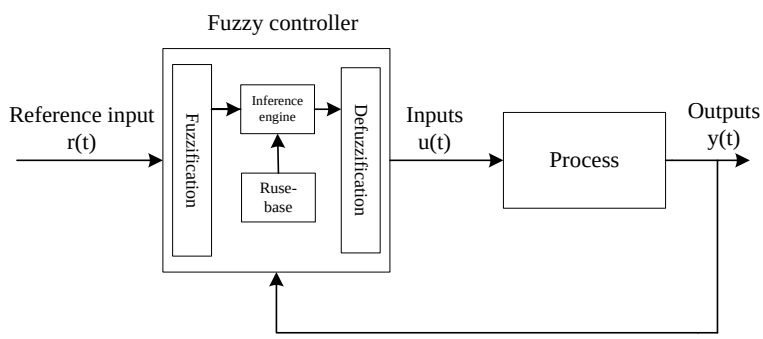

Figure 9. The block diagram of the generalized indistinct controller

The designed FLC would determine the amount of VOA over its transient operation. The FLC and the available WTSM constitute a closed loop which is shown as below.

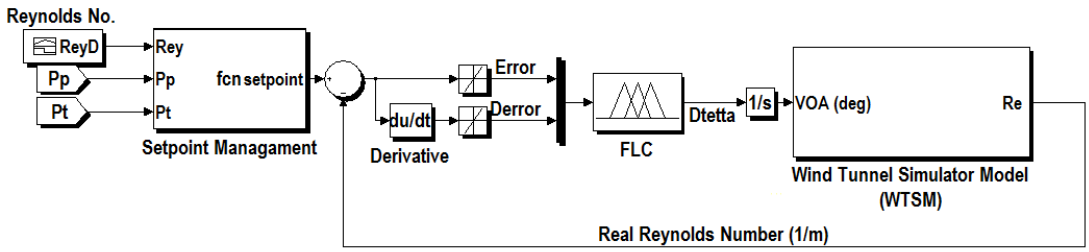

Figure 10. Layout of the wind tunnel simulator model and its FLC

The first input of controller is the Reynolds number error (the difference of desired Reynolds number signal and current Reynolds amount). This input is named Error. The defined fuzzy function for the input is shown in Figure 11. The second input is the first input variations over time. This input is named error rate or Derror. The defined fuzzy function for the second input is shown in Figure 12.

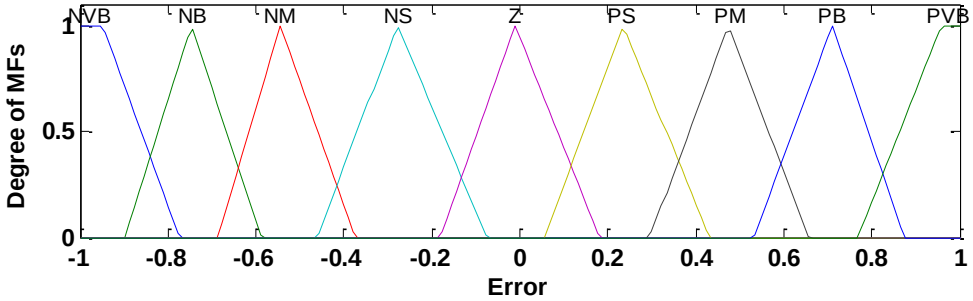

Figure 11. Error membership functions

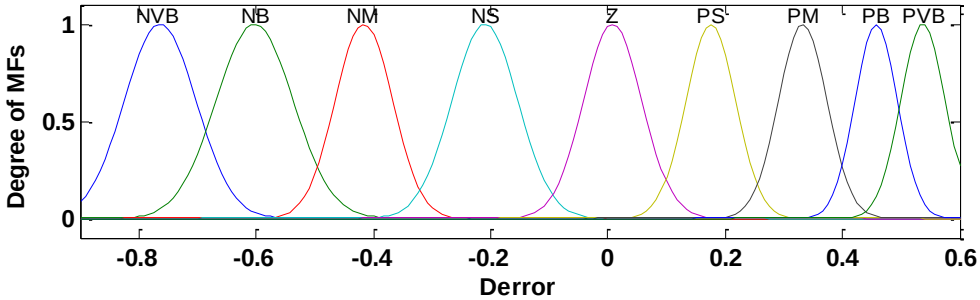

Figure 12. Error rate membership functions

Defining the proper fuzzy MFs for VOA has a great influence on the controller behavior. So, the obtained desired VOA functions as the neural network results would be helpful for defining the valve angle fuzzy MFs. This approach is helpful to defuzzify the fuzzy valve angle MFs.

In this regard, each of the obtained desired valve angle functions are separately considered over fifteen equispaced time-intervals in [0-90]. So an equal number of nonequispaced intervals are also obtained on each valve angle axis. Since the rate of valve angle is much higher over the starting time-intervals (starting phase of blowdown

run), so a large number valve angle-intervals are situated close to the end part of their axis.

The FLC output is valve opening variations over time that is named Dtetta. The defined fuzzy function for the FLC output is shown in Figure 13.

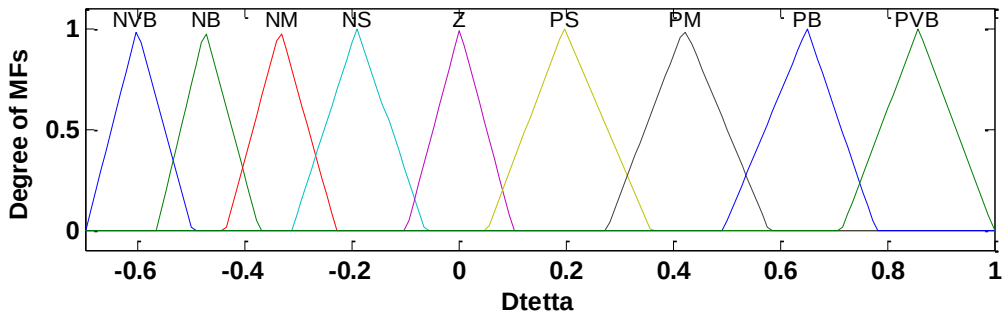

Figure 13. Dtetta membership functions (the FLC output)

Conventionally, fuzzy rules are established by a combination of knowledge, experience and observation and may thus not be optimal. Additionally, in spite of efforts to formalize a development standard for fuzzy controllers, fine tuning its performance is still a matter of trial and error [22, 23]. The fuzzy rules list in the starting phase of the test operation is presented as Table 2.

A variety of MFs can be defined for inputs and output of the controller. By changing the number and types of the functions and rules, the wind tunnel behavior would change.

Table 2. The fuzzy rules list in the starting phase of the test operation

	Error Rate				
Error	NVB	NB	NM	NS	Z
PVB	PVB	PVB	PVB	PVB	PVB
PB	PVB	PB	PB	PB	PB
PM	PB	PM	PM	PM	PM
PS	PM	PS	PS	PS	PS
Z	PS	PS	PS	PS	Z

The defuzzification process takes place after the generation of the fuzzy control signals is completed using the inference mechanism. The resulting fuzzy set must be converted to a quantity which would be sent to the process regulating valve as a control signal. In this part, the inference results of all activated logic rules are synthesized into crisp output for making a decision. In this study, the logic AND has been implemented with the minimum operator, and the defuzzification method is based on bisector area.

The variation of VOA versus the two controller inputs is depicted in Figure 14.

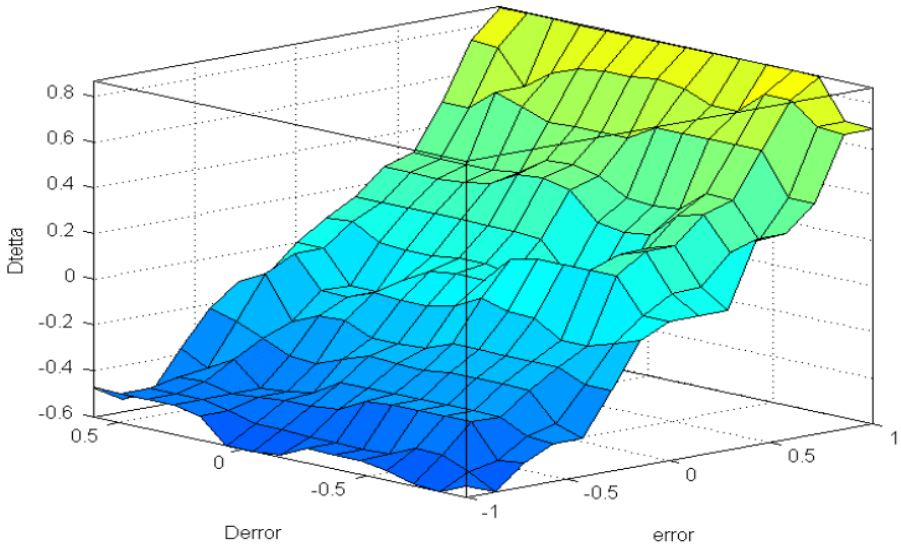

Figure 14. Control surface output of the FLC

By designing the controller, the influence of controller parameters on wind tunnel should be examined in more detail. So it would be essential to simulate the wind tunnel and controller simultaneously.

6. Testing & demonstration

Experimental verification has been carried out for supersonic conditions to show the robust control ability of the fuzzy logic applied to the BSWT. The accuracy of the simulation applied to calculating accurate blowdown run times is also discussed. Besides maintaining a constant test section Reynolds number, Simulink software has the ability to change its control parameters during the blowdown run, which yields several new supersonic testing possibilities to be discussed.

The desirable tunnel performance would be obtained by applying more and various types of MFs and rules and then rerunning the simulation program. This technique is effective to achieve the best FLC. The simulation results of wind tunnel model with FLC, and the trace of the Reynolds number error are presented in Figures 15 and 16.

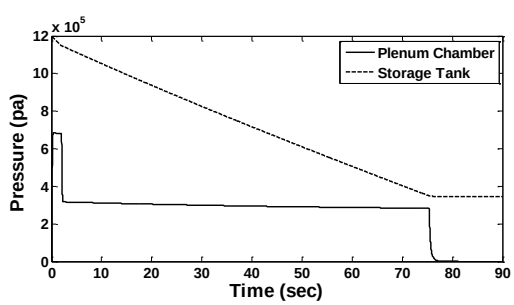

(a)

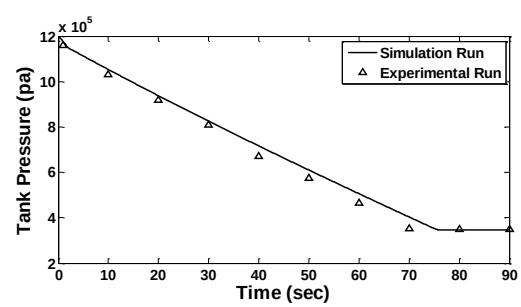

(b)

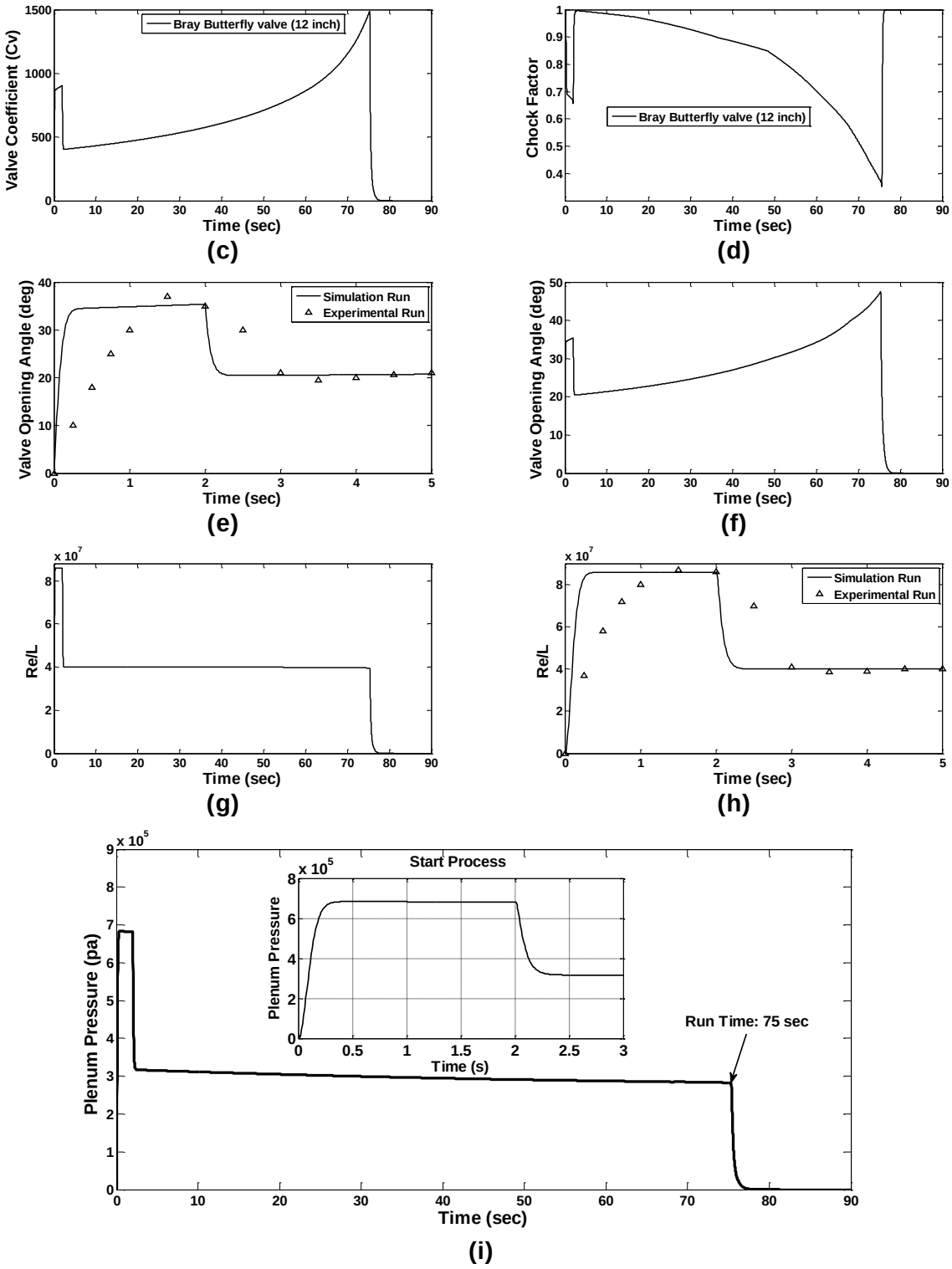

Figure 15. Simulation results of the BSWT model with the FLC, (a) Plenum and storage tank pressures versus time for a Mach 3 blowdown run, (b) Simulated storage tank pressure for a Mach 3 simulation and experimental results, (C)

Valve sizing coefficient variations for 12 inch Bray butterfly control valve, (d) Chock factor variations versus simulation time, (e) Valve opening angle (VOA) simulation in the starting phase of blowdown run and experimental results, (f) VOA simulation versus simulation time, (g) The Reynolds number variation for Mach 3 simulation, (h) The Reynolds number in the starting phase and experimental results, (i) Plenum pressure in the starting and running phase.

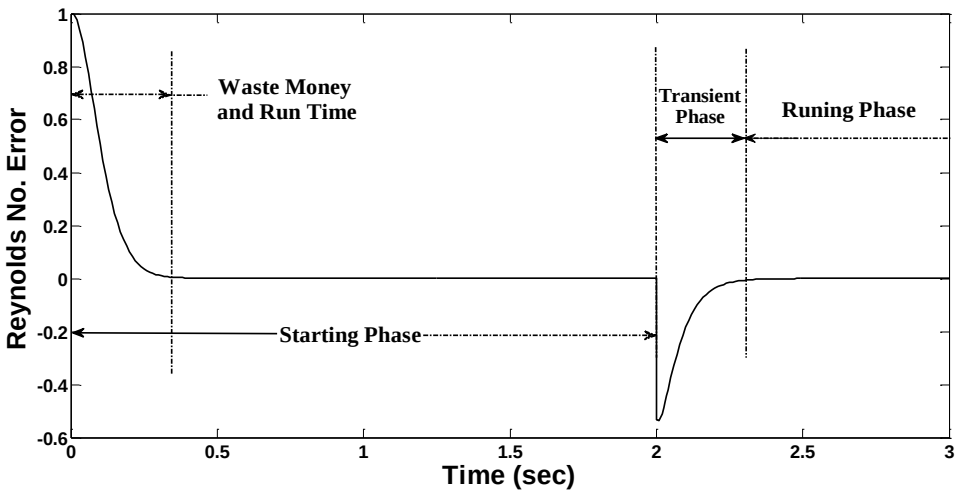

Figure 16. Trace of the Reynolds number error

Whether a fuzzy control design will be stable is a somewhat open question. The problems of FLC stability analysis and optimality are not addressed explicitly; such issues are still open problems in fuzzy controller design. Various nonlinear stability analysis methodologies could be applied for analyzing fuzzy control systems. Some methods have been proposed based on the Lyapunov's second method. The second method of Lyapunov (also referred to as the direct method) is the most general for determining the stability of a nonlinear and/or time-variant system of any order. It is a hot research topic now. In this project, the response curves of the system and its parameters including rise time, overshoot ratio, and settle time may be analyzed for specifying the performance of the FLC. The proper parameters for system response are obtained by adjusting either the rules, or the input and output scaling factors, or some other parameters of the FLC. Using the foresaid method, the control loop behavior for the system presented in this paper is well known and considered sufficient.

7. Conclusion

In this study, a FLC is developed in Simulink software environment provides sufficient control for a BSWT. Considering the number of pressure and temperature transducers and the performance of the pneumatic control valve, the error seen in the test section Reynolds number during a blowdown run is minimized with the control program for the wind tunnel facility characteristics. With an understanding of the effects of the fuzzy MFs using the simulation and experimental results, the Simulink program can be immediately used for different initial blowdown conditions.

Using of the intelligent control system, lead to achieve a control response with lowest overshoot, settling time and steady state error. Using of this intelligent method can help us to choose a best valve type and its size. Since each wind tunnel test run operation needs lot of financial cost, the proposed mathematical model will be helpful in process of valve sizing and choosing an actuator in lowest time. In this article by applying a reverse design plan, some VOA function is obtained. These functions have a great effect in reasonable valve size and valve type selection.

References

[1] A. Pope and K. L. Goin, "High-Speed Wind Tunnel Testing", John Wiley & Sons Inc., New York, **(1965).**
[2] C. R. Nott, S. M. Ölçmen, D. R. Lewis and K. Williams, "Supersonic, Variable-throat, Blow-down Wind Tunnel Control Using Genetic Algorithms, Neural Networks, and Gain Scheduled PID", Springer Science, vol. 29, **(2008)**, pp. 79-89.
[3] J. Matsumoto, "Design and Testing of a Subscale Supersonic Aeropropulsion Wind Tunnel", M. Sc. Thesis, Department of Aerospace Engineering, University of Texas at Arlington, USA, **(2000).**
[4] D. Kraft, "Optimal Control of a High Performance Wind Tunnel", Annual Review in Automatic Programming, vol. 13, no. 2, **(1985)**, pp. 79-83.
[5] X. Wang and H. Yang, "Hierarchical Multiple Models Adaptive Feedforward Decoupling Controller Applied to Wind Tunnel System", Lecture Notes in Control and Information Sciences, vol. 344, **(2006),** pp. 287-298.
[6] D. S. Hwang and P. L. Hsu, "A Robust Controller Design for Supersonic Intermittent Blowdown Type Wind Tunnels", Aeronaut J Roy Aeronaut Society, vol. 102, no. 1013, **(1998),** pp. 161-169.
[7] H. Miwa, M. Sato, S. Sakakibara and K. Takashima, "Closedloop Mach Number Control and Measurement", Proceeding of the international symposium of the Fluid control and measurement**, (1985)** September 2-5, pp. 515-520.
[8] R. Van Zanten, "Wind Tunnel Control by CompactRio", http://www. citengineering.com/down-loads/pdf/TUDelft-Eng.pdf, **(1986)**.
[9] F. K Lu, D. R. Wilson and J. Matsumoto, "Rapid valve Opening Technique for Supersonic Blowdown Tunnel", Experimental Thermal and Fluid Science Journal, vol. 33, **(2009)**, pp. 551-554.
[10] L. A. Zadeh, G. J. Klir and B. Yuan, "Fuzzy Sets, Fuzzy Logic, Fuzzy Systems", World Scientific Pub Co Inc., Washington D.C. **(1996)**.
[11] J. H. Lilly, "Fuzzy Control and Identification", John Wiley & Sons Inc., New York, **(2010).**
[12] E. H. Mamdani and S. Assilian, "An Experiment in Linguistic Synthesis with a Fuzzy Logic Controller", Int. I.M. Machine Studies, vol. 7, **(1975)**, pp. 1-13.
[13] A. Nikranjbar and A. Nazarian Sharbabaki, "Simulation and Control of Wind Turbine Using Hydrostatic Drive Train", Majlesi Journal of Energy Management, vol. 2, no. 2, **(2013)**, pp. 12-17.
[14] A. Nazarian Sharbabaki and A. Nikranjbar, "Modeling and Simulation of Longitudinal Vehicle Dynamic Using Hydrostatic Power Transmission System", Proceeding of the 3rd International Conference on Mechanic Automation and Control Engineering, **(2012)** July 27-29, pp. 1605-1609.
[15] Fisher Controls International, "Control valve handbook (2nd ed.)", Fisher International Company, USA, **(2005).**
[16] R. Considine and S. Ross, "Handbook of Applied Instrumentation", McGraw-Hill, New York, **(1964)**.
[17] Bray Control Valve Web site, http://www.bray.com, **(2013)**.
[18] M. G. Silva, Victor O. R. Gamarra and V. Koldaev, "Control of Reynolds Number in High Speed Wind Tunnel", Journal of Aerospace of Technology and Management, vol. 1, no. 1, **(2009),** pp.69-77.
[19] R. W. Fox, A. T. Mcdonald and P. J. Pritchard, "Introduction to Fluid Mechanics (6th ed.)", John Wiley & Sons Inc., New York, **(2002)**.
[20] F. M. White, "Fluid Mechanics (5th ed.)", McGraw-Hill, New York, **(2002)**.
[21] A. M. Kuethe and C. Y. Chow, "Foundations of Aerodynamics (4th ed.)", John Wiley & Sons, New York **(1998)**.
[22] A. J. Chipperfield, B. Bica and P. J. Fleming, "Fuzzy Scheduling Control of a Gas Turbine Aero-Engine: A Multiobjective Approach", IEEE Transactions on Industrial Electronics, vol. 49, no. 3, **(2002)**, pp. 536-548.
[23] H. Lakany and G. M. Nelson, "An Investigation into the Application of Fuzzy Logic Control to Industrial Gas Turbines", Journal of Engineering for Gas Turbines and Power, vol. 129, no. 4, **(2007)**, pp. 7-10.

Authors

Amin Nazarian Shahrbabaki

He received a M.S. in Propulsion Engineering from Malek-Ashtar University of Technology (MUT), Isfahan, Iran in 2013. He also received his B.S. in Mechanical Engineering from KIAU, Alborz, Iran in 2011. His main research interests include wind energy conversion systems modeling and control, application of artificial intelligence systems in turbine engine control and fault diagnosis.

Ali Shahriari

He is a graduated M.S. student in Propulsion Engineering at Malek-Ashtar University of Technology, Isfahan, Iran. He received his B.S. degree in Aerospace Engineering from the same university in 2009. His main research interests include turbine engine modeling and control, engine fault diagnosis and detection, and turbo machinery.

Dr. Mehrdad Bazazzadeh

He is an associate professor of Aerospace Engineering in the Mechanical and Aerospace Engineering Department of Malek-Ashtar University of Technology, Isfahan, Iran.

Dr. Mojtaba Dehghan Manshadi

He is an assistant professor of Aerospace Engineering in the Mechanical and Aerospace Engineering Department of Malek-Ashtar University of Technology, Isfahan, Iran.