Calibration and Time-independence of Buffer-less System for Thermistor Temperature Measurement

Jong-Dae Kim[1,2], Chan-Young Park[1,2,*], Ji-Min Kim[3], Yu-Seop Kim[1,2] and Hye-Jeong Song[1,2]

[1] *Dept. of Ubiquitous Computing, Hallym University, Korea*
[2] *Bio-IT Research Center, Hallym University, Korea*
[3] *Department of Computer Engineering, Hallym University, Korea*

{ kimjd, cypark, kimjimin87, yskim01, hjsong }@hallym.ac.kr

Abstract

This paper presents a temperature measurement system without the input buffer. A voltage follower or a buffer is required to minimize the influence of the ADC input impedance in the thermistor temperature measurement system. In such system, a high performance operational amplifier is usually required to prevent the noise and distortion due to the additional circuit. Negative power is also necessary to prevent the distortion of the low voltage input signal. This paper introduces a buffer-less system with a calibration method to resolve such problems. The low temperature coefficient precision resistors were employed to calibrate the input resistance and the leakage current of ADC. The experimental results show that the calibrated error decreased from 190mK to 40mK. As a result, it was shown that the ADC input impedance is time-independent.

Keywords: *Thermistor, input impedance, operation amplifier, buffer, calibration*

1. Introduction

Among the various temperature measuring devices that has been developed, NTC (Negative Temperature Coefficient) thermistor has a 10-fold higher temperature coefficient than the commonly used platinum sensor, and shows several advantages such as high sensitivity, fast thermal response, various shapes and sizes, and low-cost [1, 2]. Therefore in the biomedical field, which handles a limited range of temperature, NTC thermistor is favored over the other devices [3].

When measuring the temperature with a NTC thermistor, the resistance should be measured using a bridge circuit or a voltage divider. However, since the resistance changes in a nonlinear fashion according to the temperature, many methods of linearization have been developed [4, 5]. For a NTC thermistor, the resistance change can be altered easily to a voltage change by dividing the voltage with a simple voltage divider. The linearization of the voltage change can be gained in high resolution in a digital form through the ADC due to the NTC thermistor's high sensitivity. By employing an ADC with high enough resolution, any desired temperature resolution can be achieved [1].

In the simple voltage divider circuitry, a constant voltage is divided by the serial connection of the thermistor and a reference resistor, and the divided voltage is inputted to the ADC, resulting in a digit. The resistance of the thermistor is calculated with the digit, and the temperature is estimated with a calibration method such as Steinhart-Hart equation [1]. In the

* Corresponding Author: cypark@hallym.ac.kr

circuit, the high voltage reference of the ADC is usually connected to the constant voltage of the divider to minimize the influence of the voltage alteration of the power source. When the divided voltage is applied to the ADC, the voltage divider is isolated from the ADC with a voltage follower or a buffer made with an operation amp (OP amp), in order to minimize the influence of the ADC input resistance. However, the additional circuitry and the buffer nonlinearity can cause noise or distortion of the divided voltage signal. Also, a negative voltage source is required for the buffer to prevent the distortion of the low divided voltage input.

If the ADC input impedance is known, the resistance of the thermistor, that is, the temperature can be measured accurately by directly connecting the divided voltage to the ADC without any buffer. In this paper a calibration method is proposed and applied to the temperature measurement system which consists of a simple voltage divider and a microcontroller with ADC. The input impedance of the ADC is modeled and identified with the calibration method. The emulation of thermistor resistance is measured using four precision resistors, and it was determined whether this measured temperature was time-invariant. Also a calibration method using the input impedance from the measure temperature is proposed.

Experimental results show that the proposed model was a good approximation of the ADC input impedance and the calibrated temperature error was significantly reduced. As a result, it was shown that the ADC input impedance is time-independent.

2. Methods

In this paper, the 8-bit microcontroller (PIC18F4458, microchip technology inc.) with an integrated 12bit ADC was selected as the temperature measurement system. The ADC has 10 input channels and four of them were selected to be connected to the voltage divider. The system was intended to measure the heat blocks of the PCR thermal cycler and the interchangeable thermistor (U.S. Sensor Corp.) having the precision of 0.1°C was selected. As the important temperatures are 4°C, 60°C, 72°C, and 95°C in the system, the precision resistors with similar resistance of the thermistor at the temperatures were employed to emulate the thermistor. The corresponding temperatures of the selected precision resistors were 4.0°C, 60.0°C, 72.3°C, and 95.0°C. The circuit module with the resistors and switches was assembled to apply any of them to any of the voltage divider circuits.

Figure 1 shows the equivalent circuits with an ideal buffer and without any buffer of the ADC input in the temperature measuring system. The thermistor resistance $r(t)$ of each circuit is the resistance of one of the aforementioned precision resistors.

The following equations express the ADC input voltages normalized to the power voltage *V*.

$$\text{With the buffer: } u(t) = \frac{R}{R + r(t)} \tag{1}$$

$$\text{Without the buffer: } u(t) = \frac{R // Z(u)}{R // Z(u) + r(t)} \tag{2}$$

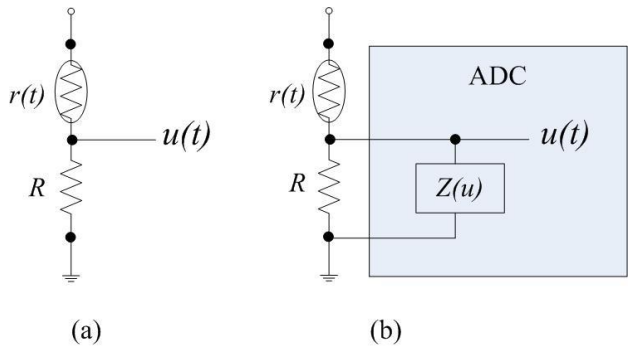

Figure 1. The equivalent circuits of the voltage divider (a) with buffer and (b) without buffer

In the above equation, R, $r(t)$, $u(t)$, and $R // Z(u)$ represent the reference resistance, the thermistor resistance, the divided voltage, and the parallel impedance of the reference resistance and input impedance, respectively. The ADC input impedance normally consists of input resistance and leakage current, and the quality of the ADC is higher when the input resistance is closer to infinity, and the leakage current is near zero. In this case, the divided voltage can be connected without a buffer and can be depicted as equation (1). In the less than ideal case, the ADC input impedance of Figure 1(b) can be modeled with an input resistance and a leakage current as shown in Figure 2.

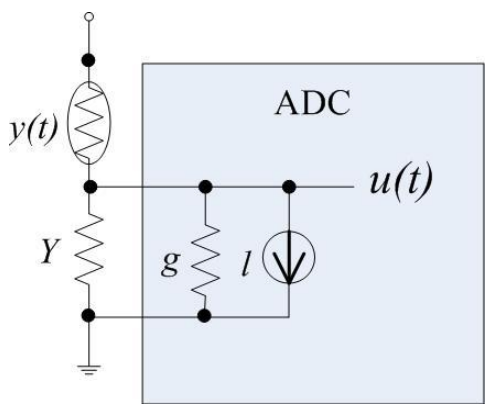

Figure 2. ADC input impedance model

Each resistance in Figure 2 is represented in admittance for easy derivation of the calibration equations as follows:

$y(t)$: thermistor admittance, $y(t) = 1/r(t)$

Y : reference resistor admittance, $Y = 1/R$

g : ADC input admittance

l : ADC input leakage current

According to Kirchhoff's law:

$$(1-u)y = Yu + gu + l \tag{3}$$

Therefore the admittance of the thermistor satisfies the following.

$$y = \frac{(Y+g)u + l}{(1-u)} \tag{4}$$

With an ideal buffer, g and l can be ignored, and the admittance of the thermistor can be calculated through the following.

$$y = \frac{Yu}{(1-u)} \tag{5}$$

By obtaining the thermistor admittance with equation (4) or (5), the temperature can be estimated with the resistance-temperature table of the thermistor or the Steinhart-Hart equation. If the unknown parameters g and l of the equation (4) can be identified, the thermistor admittance can be gained with equation (4) without the need of a buffer and directly connecting the divided voltage to ADC. Since any thermistor should be calibrated before use in general, the aforementioned parameters can be identified when the thermistor is calibrated. However the total system calibration process will be very simplified if the system is calibrated independently of the thermistor calibration, because the temperature measurement system should be certified by an authorized inspection agency. In this paper, the unknown parameters are found independently of the thermistor, by emulating it with precision resistors.

The measurement of the divided voltages by applying two precision resistors with the resistances corresponding to two temperature points is enough to identify the unknowns in the equation (3). However, four equations are obtained from the corresponding four important temperature points of the PCR thermal cycler. Therefore the unknown parameters were estimated with the least square method.

The two unknown parameters can be calibrated with the ADC results by connecting two thermistors. To simplify the unknown parameters, substitute $g_i = Y + g$, and calculate g_i and l. Rearranging equation (4) according to parameter will yield the following.

$$(1-u)y = g_i u + l \tag{6}$$

Put the thermistor admittance as y_1, y_2 and the ADC result by connecting the two as d_1, d_2, for two temperatures t_1, t_2. Put the maximum value of ADC as N (for 12 bit, N=4096). Then, two equations can be obtained for the unknown parameters, g_i and l, as the following.

$$\left(1-\frac{d_1}{N}\right)y_1 = g_i\frac{d_1}{N}+l$$
$$\left(1-\frac{d_2}{N}\right)y_2 = g_i\frac{d_2}{N}+l \tag{7}$$

By calculating g_i and l from the two simultaneous equations in (7), the system can be calibrated. However, it is recommended to calibrate for more than two temperatures since the calibration is done for more than two important temperatures in real thermistor calibration. In this case, there will be more than two equations in the form of equations shown in (7), and will be able to calculate more stable parameters through the least square method. For example, when calibrating four significant temperatures, the lest square method can be used as follows;

$$p = (A^T A)^{-1} A^T B \tag{8}$$

The equations for p, A, and B of above is shown below.

$$p = \begin{bmatrix} g_i \\ l \end{bmatrix}, A = \begin{bmatrix} \frac{d_1}{N} & 1 \\ \frac{d_2}{N} & 1 \\ \frac{d_3}{N} & 1 \\ \frac{d_4}{N} & 1 \end{bmatrix}, B = \begin{bmatrix} \left(1-\frac{d_1}{N}\right)y_1 \\ \left(1-\frac{d_2}{N}\right)y_2 \\ \left(1-\frac{d_3}{N}\right)y_3 \\ \left(1-\frac{d_4}{N}\right)y_4 \end{bmatrix} \tag{9}$$

Figure 3 shows the diagram of the connection between the thermistor emulation system and the temperature measurement system in order to calibrate the points of four significant temperatures of the thermocycler. Four of the precision resistors that correspond to the thermistor resistance of the four temperatures are attached to the thermistor emulation, which can be connected and disconnected with a switch. To calibrate the admittance into ADC values, the data set $\{(y_{1,}d_1),(y_2,d_2),(y_3,d_3),(y_4,d_4)\}$ is obtained by connecting the switches, and the unknown parameters are calculated with equation (8).

3. Results and Discussions

The temperature was measured by connecting the precision resistors corresponding to the temperatures of 95.07 72.36°C, 60.05 and 4.02°C as described in the previous section. The temperature coefficient of the precision thermistor is $\pm 25 ppm/℃$, and the tolerance is

$\pm 0.1\%$. Four sets of the system were measured and the results are shown in Table 1. Note that each set has 4 channels. The table shows that the channel and the set variation of the ADC input impedance are negligible. However, the temperature measurement error was 220, 170, 130, and 250mK in absolute temperature for 95.07°C, 72.36°C, 60.05°C, and 4.02°C, respectively.

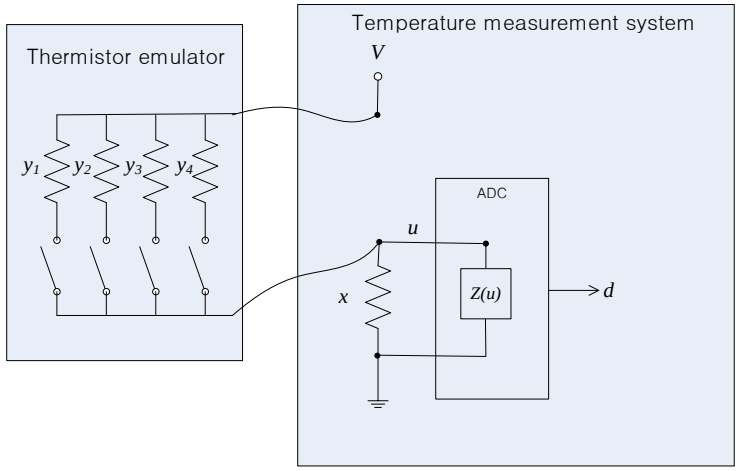

Figure 3. Four Point Calibration of the Temperature Measurement System using Thermistor

Table 2 shows the temperature measurement error after calibration with the suggested method. Comparing the second and the third rows, it is noticeable that the calibrated error is significantly reduced. The error was reduced to one-eighth and the overall error was reduced to less than 30mK, which was acceptable for most applications. The results indicate that an accurate temperature measurement is possible without the isolation of the ADC and voltage divider through a buffer. Such result has great significance considering the noise due to an additional circuit, distortion from the nonlinearity of poor operation amplifier, and the negative power supply.

The variation between the sets and between the channels of the ADC input impedance was negligible in this experiment.

To observe the ADC input impedance according to time, the temperature was measured for three days. Four months later, the same experiment was conducted for three days, and the results were same with that of Table 3.

Table 3 shows the temperature according to time for the four systems with four channels. There is almost no difference of temperature according to time, and the temperature can be said to remain constant. This result shows the time-independence of ADC input impedance.

Table 1. Measurement Results

True temperature (°C)		95.07	72.36	60.05	4.02
S1	CH1	94.9	72.2	59.9	3.9
	CH2	94.9	72.2	59.9	3.9
	CH3	94.9	72.3	59.9	3.9
	CH4	94.9	72.3	60.0	3.9
S2	CH1	94.9	72.3	60.0	4.0
	CH2	94.9	72.3	60.0	4.0
	CH3	94.9	72.3	60.0	4.0
	CH4	94.9	72.3	60.0	4.0
S3	CH1	94.8	72.1	59.9	3.6
	CH2	94.8	72.1	59.8	3.6
	CH3	94.8	72.1	59.8	3.6
	CH4	94.8	72.1	59.9	3.6
S4	CH1	94.8	72.1	59.9	3.6
	CH2	94.8	72.1	59.9	3.6
	CH3	94.8	72.1	59.9	3.6
	CH4	94.8	72.2	59.9	3.6
Mean (°C)		94.85	72.2	59.92	3.78
Error mean(°K)		0.22	0.17	0.13	0.25

Table 2. Calibration Results

True temperature (°C)	95.07	72.36	60.05	4.02	mean
Error mean (°K)	0.22	0.17	0.13	0.25	0.19
Calibrated error mean (°K)	0.02	0.01	0.04	0.09	0.04

Table 3. Temperature According to Time

System	Temperature difference	1st trial	2nd trial	3rd trial	4th trial
S1	0.0	16/16	16/16	16/16	16/16
	0.1	0/16	0/16	0/16	0/16
	0.2	0/16	0/16	0/16	0/16
	0.3	0/16	0/16	0/16	0/16
S2	0.0	16/16	16/16	16/16	16/16
	0.1	0/16	0/16	0/16	0/16
	0.2	0/16	0/16	0/16	0/16
	0.3	0/16	0/16	0/16	0/16
S3	0.0	16/16	16/16	16/16	16/16
	0.1	0/16	0/16	0/16	0/16
	0.2	0/16	0/16	0/16	0/16
	0.3	0/16	0/16	0/16	0/16
S4	0.0	16/16	16/16	15/16	15/16
	0.1	0/16	0/16	1/16	1/16
	0.2	0/16	0/16	0/16	0/16
	0.3	0/16	0/16	0/16	0/16
Error		0	0	0.1	0.1

Acknowledgments

The research was supported by Basic Science Research Program through the National Research Foundation of Korea(NRF) funded by the Ministry of Education, Science and Technology(2012R1A1A2040381) and Hallym University Research Fund, 2012 (HRF-201208-005).

References

[1] H. -G. Schweiger, M. Multerer and H. J. Gores, “Fast multichannel precision thermometer”, IEEE T. Instrum. Meas., vol. 56, **(2007)**, pp. 2002-2009.
[2] V. Maric, M. D. Lukovic, L. Zivanov, O. Aleksic and A. Menicanin, “EM simulator analysis of optimal performance thick-film segmented thermistors versus material characteristics selection”, IEEE T. Instrum. Meas., vol. 57, **(2008)**, pp. 2568-2575.
[3] C. Chen, “Evaluation of resistance–temperature calibration equations for NTC thermistors”, Measurement, vol. 42, **(2009)**, pp. 1103–1111.
[4] A. A. Khan, “An improved linear temperature/voltage converter using thermistor in logarithmic network”, IEEE T. Instrum. Meas., vol. IM-34, **(1985)**, pp. 635-638.
[5] Z. P. Nenova and T. G. Nenov, “Linearization circuit of the thermistor connection”, IEEE T. Instrum. Meas., vol. 58, **(2009)**, pp. 441-449.

Authors

Jong-Dae Kim received his M.S. and the Ph.D. degrees in Electrical Engineering from Korea Advanced Institute of Science and Technology, Seoul, Korea, in 1984 and 1990, respectively. He worked for Samsung Electronics from 1988 to 2000 as an electrical engineer. He is a Professor in Department of Ubiquitous Computing, Hallym University. His recent interests focus on biomedical system and bioinformatics.

Chan-Young Park received his B.S. and the M.S. from Seoul National University and the Ph.D. degree from Korea Advanced Institute of Science and Technology in 1995. From 1991 to 1999, he worked at Samsung Electronics. He is currently a Professor in the Department of Ubiquitous Computing of Hallym University, Korea. His research interests are in Bio-IT convergence, Intelligent Transportation System and sensor networks.

Ji-Min Kim received his B.S. degree in Electronic Engineering from Hallym University. He currently studies for a master's degree in Computer Engineering at Hallym University. His recent interests focus on biomedical system and embedded system.

Yu-Seop Kim received his Ph.D. degree in Computer Engineering from Seoul National University. He is currently a Professor in the Department of Ubiquitous Computing at Hallym University, South Korea. His research interests are in the areas of bioinformatics, computational intelligence and natural language processing.

Hye-Jeong Song received his Ph.D. degree in Computer Engineering from Hallym University. She is a Professor in Department of Ubiquitous Computing, Hallym University. Her recent interests focus on biomedical system and bioinformatics.